GRING

Industrial tools and equipment

We would like to present you the catalog of professional tools and industrial equipment for various industries.

Our products are safe and reliable in operation, made from the durable materials according to the highest international standards.

GRING - German quality

GRING TOOLS - Hand tools
GRING Pneumatic TOOLS - Pneumatic tools with accessories
GRING Lubrication and Garage Equipment Technology - lubrication tools, equipment for oils, pumps and systems for diesel fuel and lubricating materials
GRING Hydraulic TOOLS - Cylinders and lifting equipment, pumps and control valves, removers, bolted joint tools
GRING Welding - Plastic pipes docking devices
GRING Metal Working - Drilling, milling, lathes machines

Our products are used in many industries such as construction, energy, shipbuilding, constructionof railways, as well as mining and oil and gas industries.

CONTENTS

Wrenches (combination, double open, drive ratcheting combination, hex key)	3
Torque wrench	11
Torque multiplier	15
Socket (Cr-V, Cr-MO)	16
Sockets accessories (T-bar, ratchet, extension bar, adaptor)	29
Screwdrivers	33
Hammers, axes, pry bars	35
Pliers	37
Dielectric tools up to 1000V	43
Blade, hand truck	48
Multibox tool sets	49
Gear puller, bench vices	64
Air tools and accessories	66
Compressors	75
Non sparking tools	76
Hydraulic equipment (cylinders, toe jacks, torque wrench, electric pump, pressing tools, cable cutters, pullers, pumps)	123

Combination chrome plated wrench at an angle of 15° GRING

Code	Size mm	Code	Size inch	L mm	C mm	B mm	C1 mm	B1 mm	WT g
52301001	6	52302001	1/4"	105	15.5	10.1	4	4.7	17
52301002	7			115	17	11.5	4	5	20
52301003	8	52302002	5/16"	125	19.2	12.8	4.5	5.5	26
52301004	9			135	21.2	14.2	4.5	5.9	34
52301005	10	52302003	3/8"	145	23.2	15.6	5	6.5	36
52301006	11	52302004	7/16"	155	25.3	16.9	5.4	6.9	44
52301007	12			165	27.2	18.3	5.5	7.3	52
52301008	13	52302005	1/2"	175	29.4	19.7	5.9	7.8	63
52301009	14	52302006	9/16"	185	31.5	21.2	6.2	8.3	78
52301010	15			195	33.2	22.5	6.4	8.6	100
52301011	16	52302007	5/8"	205	34.7	24	6.7	8.9	110
52301012	17	52302008	11/16"	215	36.5	25.3	6.9	9.3	132
52301013	18			225	38.7	26.8	7.2	9.9	144
52301014	19	52302009	3/4"	235	40.7	28.1	7.4	10.5	154
52301015	20			245	43.1	29.7	7.7	10.9	188
52301016	21	52302010	13/16"	255	44.8	31.3	8	11.3	200
52301017	22	52302011	7/8"	265	46.9	32.6	8.2	11.5	220
52301018	23			275	48.3	34.2	8.4	11.8	260
52301019	24	52302012	15/16"	285	50.4	35.5	8.7	12.1	280
52301020	25	52302013	1"	295	52	36.9	8.9	12.5	340
52301021	26			305	53.6	38.2	9.2	12.8	370
52301022	27	52302014	1-1/16"	315	55.7	39.6	9.4	13.1	390
52301023	28			325	57.6	40.9	9.7	13.3	430

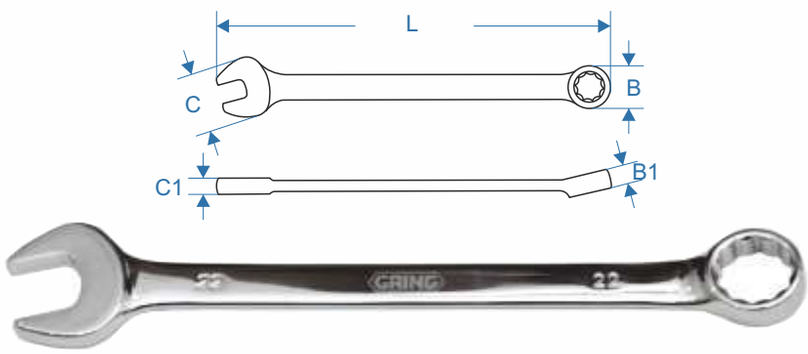

Code	Size mm	Code	Size inch	L mm	C mm	B mm	C1 mm	B1 mm	WT g
52301024	29	52302015	1-1/8"	335	59.7	59.7	9.9	13.5	440
52301025	30			345	61.8	61.8	10.1	13.7	500
52301026	32	52302016	1-1/4"	365	65.8	65.8	10.4	14.3	560
52401001	33	52302017	1-5/16"	380	69.2	69.2	10.7	15	630
52401002	34			380	69.2	69.2	10.7	15	630
		52302018	1-3/8"	410	74	74	13.5	19.4	800
52401003	36	52302019	1-7/16"	410	74	74	13.5	19.4	800
52401004	38	52302020	1-1/2"	430	77	77	15	20.4	1000
52401005	41	52302021	1-5/8"	460	84	84	16	21.6	1160
52401006	42			460	84	84	16	21.6	1160
52401007	43	52302022	1-11/16"	460	84	84	16	21.6	1160
52401008	45	52302023	1-3/4"	500	92	92	17	23	1700
52401009	46	52302024	1-13/16"	500	92	92	17	23	1700
52401010	48	52302025	1-7/8"	540	102	102	18	24.6	2000
52401011	50	52302026	2"	540	102	102	18	24.6	2000
		52302027	2-1/8"	560	118	118	18	28	2800
52401012	55	52302028	2-1/4"	560	118	118	18	28	2800
52401013	58			600	124	124	20	31	3900
52401014	60	52302029	2-5/16"	600	124	124	20	31	3900
52401015	65	52302030	2-1/2"	680	144	144	22	31	5800
52401016	70			680	144	144	22	31	5800
52401017	75			730	149	149	25.5	36	6600
52401018	80			730	149	149	25.5	36	6600
52401019	85			790	179	179	30	38	10000
52401020	90			790	179	179	30	38	10000
52401021	95			790	179	179	30	39	10000
52401022	100			860	187	187	32	43	12000
52401023	105			860	187	187	32	43	12000

Flare nut chrome plated slotted wrench GRING

Code	Size mm	Code	Size inch	L mm	C mm	B mm	C1 mm	B1 mm	WT g
52502001	8x10			145	20.8	18.4	8.5	7	47
52502002	10x11	52503001	3/8"x7/16"	152	22.6	20.8	9	8.5	60
52502003	10x12			152	22.6	20.8	9	8.5	60
52502005	12x13	52503002	1/2"x9/16"	165	25	22.6	10.5	9	78
52502006	12x14			178	27.4	25	11	9.5	120
52502007	14x17	52503004	3/4"x1"	196	30	27.4	12	11	145
52502008	16x17	52503003	5/8"x11/16"	196	30	27.4	12	11	145
52502009	19x22			233	38	32.5	16	14	240

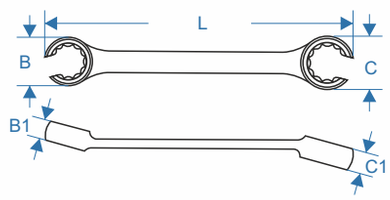

Cr-v

Reversible geartech NON-SLIP GRING

Code	Size mm	L mm	C mm	B mm	C1 mm	B1 mm	WT g
52101001	6	124					40
52101002	7	124					36
52101003	8	136					35
52101004	9	143					43
52101005	10	159					55
52101006	11	168					71
52101007	12	174					87
52101008	13	180					97
52101009	14	189					121
52101010	15	200					142
52101011	16	216					173
52101012	17	232					201
52101013	18	239					208
52101014	19	247					248
52101015	20	285					342
52101016	21	285					344
52101017	22	285					338
52101018	23	285					347
52101019	24	325					478
52101020	25	325					467
52101021	26	325					521
52101022	27	359					630
52101023	28	359					714
52101024	29	359					831
52101025	30	425					940
52101026	31	425					802
52101027	32	425					898

Compact Reversibe Switch enables Geartech Wrench to move from either direction (clockwise or counterclockwise) without sacrificing overall compact surface box end.
72-teeth needs as little as 5° to move fastener white a regular wrench needs 30° of sweep space.
Specially designed for working on automotive engine and confined space.
15° Offset Ratchet Head helps to reduse swing obstacles and to minimize knuckle fatigue.
Made by head-treated Chrome Vanadium Steel for strength exceeding international specifications.
Professional Plating prevents wrenches from corrosion. Superior life-time test. The profile of the horn in the form of a double hexahedron provides a tight
Cover the head of the screw or nut and thereby reduce the likelihood of turning the key; The angle of return of only 30 ° reduces the loss of time to toggle the key when you are screwing; Special Forged the design provides high torque transmission and high bending strength high-strength chromium-vanadium steel; Nickel chromium coating for reliable protection against corrosion.

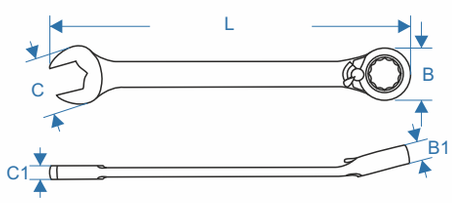

MEETS OR EXCEEDS A.N.S.I STANDARTS

12 POINT

MEETS OR EXCEEDS DIN STANDARTS

5° 72 TEETH

15°

Non-slip Open End Offer 4 Contact Points

Conventional Open End Offer 2 Contact Points

Cr-v

Box end offset wrench GRING

Code	Size mm	Code	Size inch	L mm	C mm	B mm	C1 mm	B1 mm	WT g
52506000	6x7			167	12	10.5	6	5.3	39
		52507001	1/4"x5/16"	172	13.5	10.5	6.3	5.3	50
52506001	8x10	52507002	5/16"x3/8"	182	15.3	13.5	7	6.3	61
52506002	10x11	52507003	3/8"x7/16"	197	18	16.5	8.5	7.3	88
52506003	10x12			217	19.5	16.5	9	8.7	113
52506004	11x13	52507004	7/16"x1/2"	217	21	18	9	8.7	113
52506005	12x13			218	21	19.5	9	8.7	123
52506006	13x14	52507005	1/2"x9/16"	238	22.5	21	9.5	9	165
52506012	13x15	52507006	9/16"x5/8"	238	23.5	22	9.5	9	165
52506008	14x17			245	26	22	10.5	9.2	175
52506007	16x17	52507007	5/8"x11/16"	258	26.5	25.5	11	10.5	208
52506009	17x19	52507008	11/16"x3/4"	290	29.5	26.5	12	11	278
52506010	18x19			290	29.5	27.3	12	11	278
52506013	19x21			296	33.7	29	12.5	11.5	300
52506011	19x22			296	33.7	29	12.5	11.5	300
52506014	20x22	52507009	13/16"x7/8"	316	34.5	31.5	13	12	360
52506015	22x24	52507010	7/8"x15/16"	324	36.7	33.7	13	12	434
		52507011	15/16"x1"	328	40.5	37.2	14.1	12.5	476
		52507012	1"x1-1/16"	345	43	39.5	14.5	13.5	508
		52507013	1-1/8"x1-1/4"	360	48.5	45.3	16.5	15	677
		52507014	1-3/8"x1-1/2"	440	57.5	53	20	18	1131
		52507015	1-7/16"x1-5/8"	440	61.7	53.7	20	18	1156
		52507016	1-13/16"x2"	510	76.3	70.5	21.5	20.5	1938

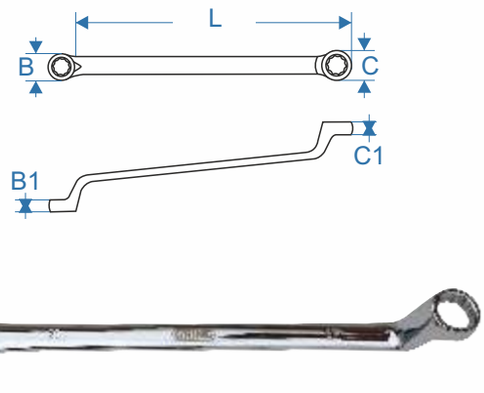

Cr-v

Double flexible socket wrench GRING

Code	Size mm	L mm	L1 mm	C mm	D mm	C1 mm	D1 mm	WT g
52605001	6x7	191	143	11.5	10.3	10.3	11.5	87
52605002	8x9	191	143	13.8	12.6	13.3	10.5	91
52605004	10x11	198	143	16.5	14.2	15.9	16	100
52605006	10x13	233	172	18.8	15	20	16	191
52605011	14x15	235	172	21.9	20.6	20	20.2	200
52605013	16x17	285	210	23.8	22.9	23	23	330
52605015	18x19	288	210	25.8	24.7	26	24	336

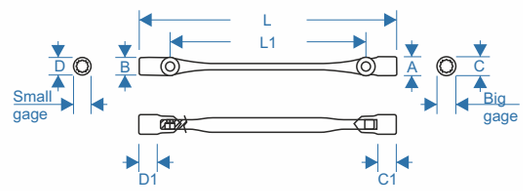

Cr-v

Double open end chrome plated wrench GRING

Code	Size mm	L mm	C mm	B mm	C1 mm	WT g
52501001	6x7	123	18	15.5	3.7	25
52501002	8x9	140	22.7	20.4	4	40
52501003	10x11	156	27.1	24.9	4.8	65
52501004	11x13	172	31.2	29.2	5.2	75
52501005	12x13	172	31.3	29.2	5.2	75
52501006	12x14	180	33.3	31.3	5.5	85
52501007	14x15	190	35.3	33.3	5.9	110
52501008	16x17	204	38.9	37.1	6.3	130
52501009	17x19	221	42.8	40.9	6.7	160
52501010	18x19	221	42.8	40.9	6.7	160
52501011	20x22	237	48.8	44.8	7.1	200
52501012	22x24	247	50.8	46.8	7.7	250
52501013	24x27	263	59.1	52.8	8.1	300
52501014	27x30	283	62.3	56.8	8.7	380
52501015	27x32	289	69.8	59.1	8.9	460
52501016	30x32	298	69.8	65.4	9	460
52501017	32x36	350	76	69.8	10.5	600
52501018	34x36	350	76	69.8	10.5	600
52501019	36x41	380	87	76	12	920
52501020	41x46	415	95	86	15	1300
52501021	46x50	465	104	95	16	1900

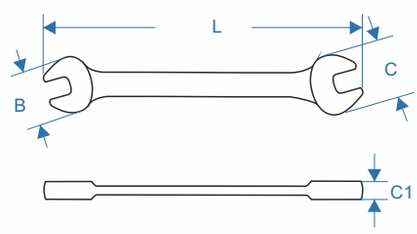

Cr-v

Combination chrome plated wrenchs set GRING

Code	Set mm	Pcs
05220006	8, 9, 10, 11, 12, 13, 14	7
05220001	7, 8, 9, 10, 11, 12, 13, 14, 15, 17, 19	11
05220002	6, 7, 8, 9, 10, 11, 12, 13, 14, 15, 17, 19, 21, 22	14
05220003	10, 11, 12, 13, 14, 17, 19, 21, 22, 23, 24, 26, 30, 32	14
05220004	6, 7, 8, 9, 10, 11, 12, 13, 14, 17, 18, 19, 22, 24, 27, 30, 32	17
05220011	6, 7, 8, 9, 10, 11, 12, 13, 14, 15, 16, 17, 18, 19, 20, 21, 22, 23, 24, 25, 26, 27, 28, 30, 32	26
Code	**Set inch**	**Pcs**
05220013	1/4", 5/16", 3/8", 7/16, 1/2", 9/16", 5/8", 11/16", 3/4", 13/16", 7/8", 15/16", 1", 1-1/16", 1-1/8", 1-1/4"	16
05220014	1/4", 5/16", 3/8", 7/16, 1/2", 9/16", 5/8", 11/16",3/4", 13/16", 7/8", 15/16", 1", 1-1/16", 1-1/8", 1-1/4", 1-5/16", 1-3/8", 1-7/16", 1-1/2"	20
05220015	1/4", 5/16", 3/8", 7/16, 1/2", 9/16", 5/8", 11/16",3/4", 13/16", 7/8", 15/16", 1", 1-1/16", 1-1/8", 1-1/4", 1-5/16", 1-3/8", 1-7/16", 1-1/2", 1-5/8", 1-11/16", 1-3/4"	23

Cr-v

Double open end chrome plated wrench set GRING

Code	Set mm	Pcs
05220018	6x7, 8x9, 10x11, 12x13, 14x15, 16x17, 17x19, 18x19, 20x22, 22x24	10
05220019	8x9, 10x11, 12x13, 14x15, 16x17, 17x19, 18x19, 20x22, 22x24, 24x27, 27x30, 27x32	12
05220020	8x9, 10x11, 12x13, 14x15, 16x17, 17x19, 18x19, 20x22, 22x24, 24x27, 27x30, 27x32, 30x32, 32x36, 34x36	14

Cr-v

Box end chrome plated wrenchs set 75° GRING

Code	Set mm	Pcs
05220005	6x7, 8x10, 10x12, 11x13, 12x13, 13x14, 16x17, 14x17, 17x19	9
05220025	8x10, 10x11, 10x12, 11x13, 12x13, 13x14, 16x17, 14x17, 17x19, 18x19, 19x22, 13x15, 19x21, 20x22, 22x24	15

Cr-v

Reversible geartech NON-SLIP open end wrench set GRING

Code	Set mm	Pcs
05220021	6, 8, 10, 12, 13, 14, 15, 17, 19	9
05220022	8, 9, 10, 11, 12, 13, 14, 15, 16, 17, 18, 19, 22, 24	14
05220023	10,11,12,13,14,15,16,17,18,19,22,24,27,30,32	15

Cr-v

Ring slogging impact wrench GRING

Code	Size mm	L mm	B1 mm	B mm	WT g
65403001	17	147	13	33	136
65403002	19				130
65403003	22	156	13	38.5	184
65403004	24	165	15	43	265
65403005	27	180	16	46	340
65403006	30	190	17	52	435
65403007	32			52	415
65403008	36	205	19	58	560
65403009	41	230	20	66	680
65403010	46	240	22	74	895
65403011	50	255	24	80	1125
65403012	55	270	25	86	1330
65403013	60	280	26	93	1245
65403014	65	300	30	102	1875
65403015	70	330	33	110	2965
65403016	75				2735
65403017	80	360	36	126	3675
65403018	85				3710
65403019	90	390	40	142	5850
65403020	95				5350
65403021	100	420	45	155	6445
65403022	105				6500
65403023	110	450	48	170	8000
65403024	115				7500

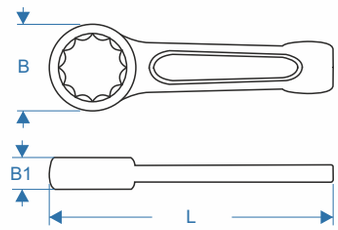

Cr-mo

Open end slogging impact wrench GRING

Code	Size mm	L mm	B1 mm	B mm	WT g
65404001	17	125	12	43.5	130
65404002	19				125
65404003	24	177	15.5	52.4	328
65404004	27	180	17	56	420
65404005	30	190		62.3	530
65404006	32	190		66.5	550
65404007	36	210	18	74.8	674
65404008	41	230	19	85.2	1040
65404009	46	250	21	95.5	1224
65404010	50	275	22	104	1790
65404011	55	302	24	114	2360
65404012	60	315	26	125	2850
65404013	65	336	28	135	3250
65404014	70	367	30	145	4000
65404015	75	394	33	156	4780

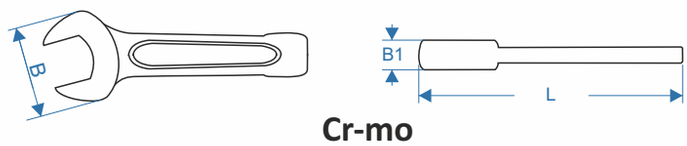

Cr-mo

Adjustable wrench GRING

Code	L mm/inch	B mm	WT g
52801001	100/4"	14	
52801002	150/6"	19	
52801003	200/8"	24	
52801004	250/10"	30	
52801005	300/12"	34	
52801006	375/15"	44	
52801007	450/18"	54	
52801008	600/24"	68	

Cr-mo

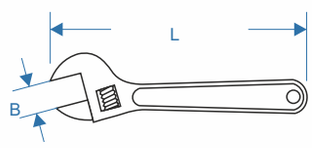

Pipe aluminum wrench lightweight GRING

Code	L mm/inch	B mm	WT g
52801025	350/14"	50	
52801026	450/18"	60	
52801027	600/24"	75	
52801028	900/36"	85	

Al

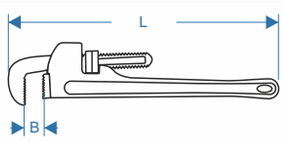

Light duty pipe wrench GRING

Code	L mm/inch	B mm	WT g
52801029	200/8"	34	
52801030	250/10"	48	
52801031	300/12"	60	
52801032	350/14"	60	
52801033	450/18"	76	
52801034	600/24"	89	
52801046	915/36"	141	
52801048	1219/48"	168	

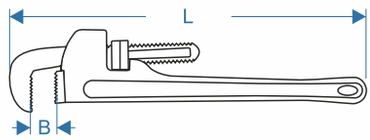

Cr-mo

Belt wrench GRING

Code	Size inch	L mm/inch	A mm/inch	WT g
52801042	9"	225/9"	110/4"	300
52801043	11"	275/11"	220/11"	600

Cr-V

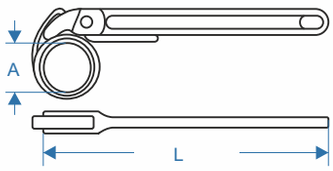

Chain pipe wrench GRING

Code	Size mm	L mm/inch	A mm/inch	WT g
52801039	12"	300/12"	110/4"	830
52801040	15"	375/15"	130/5"	1200
52801041	24"	600/24"	170/6"	1750

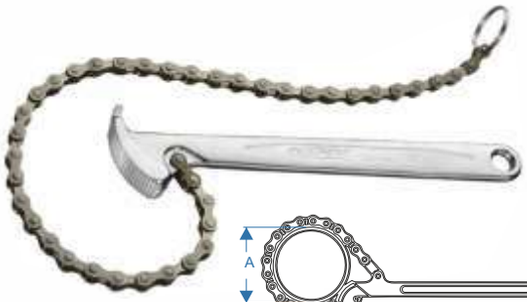

Cr-V

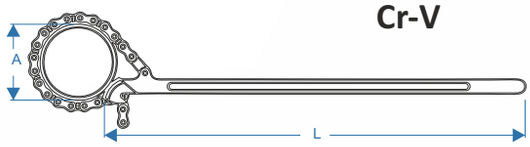

Adjustable hook spanner wrench type GRING

Code	D mm	L mm	H mm	A mm	Pcs
05220007	13-35	170	9	3.5	1
	35-50	215	10	4.5	1
	50-80	285	12	5.5	1
	80-120	345	13	6	1
	120-180	465	15	8	1

Code	D mm	L mm	H mm	A mm	Pcs
05220008	13-35	170	9	6	1
	35-50	215	10		1
	50-80	285	12		1
	80-120	345	13		1
	120-180	465	15		1

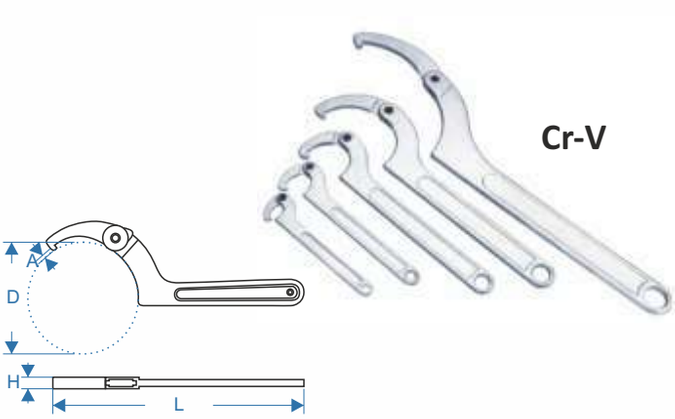

Cr-V

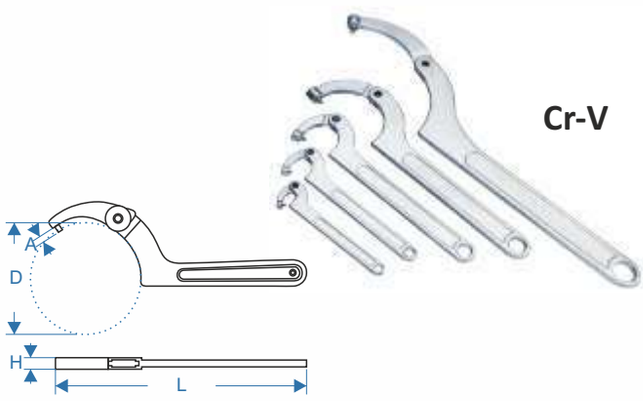

Cr-V

L-Shaped Hex key wrench GRING

Code	Type	Size mm	L1 mm	L2 mm
39709001	Hex	6	85	42
39709002		7	94	45
39709003		8	107	48
39709004		10	122	52
39709005		12	137	57
39709006		14	154	70
39709008		17	177	80
39709009		19	199	89
39709010		22	222	102
39709011		24	248	114
39709012		27	277	127
39709013		32	347	157
39709014		36	391	176

Code	Type	Size inch	L3 mm	L4 mm
39709015	Hex	1/16"	80	22
39709016		5/64"	81	23
39709017		3/32"	83	24
39709018		7/64"	85	25
39709019		1/8"	88	26
39709020		9/64"	91	27
39709021		5/32"	94	28
39709022		3/16"	98	29
39709023		7/32"	101	30
39709024		1/4"	106	31
39709025		5/16"	111	33
39709026		3/8"	116	36
39709027		7/16"	121	38
39709028		1/2"	133	41
39709029		9/16"	146	44
39709030		5/8"	159	48
39709031		3/4"	184	54
39709032		7/8"	210	60
39709033		1"	235	67

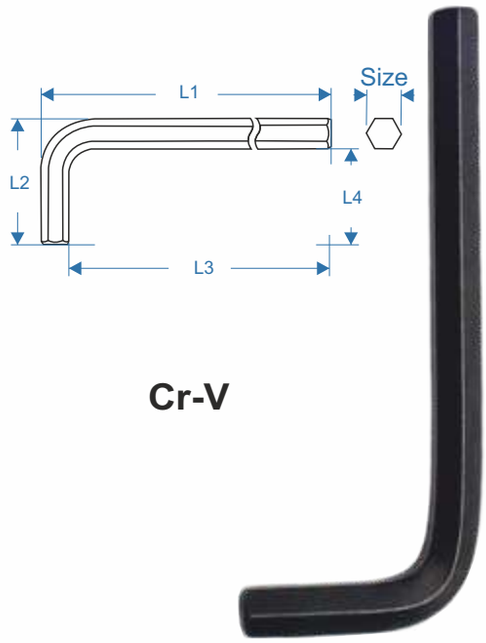

L-Shaped hex key wrench set GRING

Code	Type	Set mm	Length	Material	Pcs
39809047	Hex	2, 2.5, 3, 4, 5, 6, 7, 8, 10, 12, 14, 17, 19	Short	Cr-V	13
39809048	Hex+ball point +magnet		Long	S2 + Cr-V	
39809057	Hex+ball point +magnet	1.5, 2, 2.5, 3, 4, 5, 6, 8, 10	Extra Long	S2	9
39809007	Hex+ball point	1.5, 2, 2.5, 3, 4, 5, 6, 7, 8, 10	Long	Cr-V	10
39809008			Extra Long		
39809009	Hex+ball point +magnet			S2	
39809010	Hex		Short	Cr-V	
39809011			Extra Long		

Code	Type	Set inch	Length	Material	Pcs
39809050	Hex+ball point +magnet	1/16", 5/64", 3/32", 1/8", 5/32", 3/16", 1/4", 5/16", 3/8", 1/2", 9/16", 5/8", 3/4"	Extra Long	S2 + Cr-V	13
39809058	Hex+ball point	1/16", 5/64", 3/32", 1/8", 5/32", 3/16", 1/4", 5/16", 3/8"		Cr-V	9

39809050

39809047

39809057

39809058

39809007

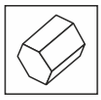

Hex

Hex+ ball point

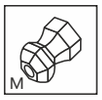

Hex+ball point +magnet

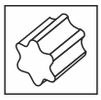

Torx

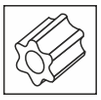

Temper-torx

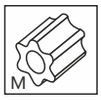

Temper-torx+ magnet

Torx wrench set GRING

Code	Type	Set	Length	Material	Pcs
39809001	Temper-torx	T10, T15, T20, T25, T27, T30, T40, T45, T50	Extra Long	S2	9
39809002	Temper-torx+ magnet				
39809012	Torx	T10, T15, T20, T25, T27, T30, T40, T45, T50	Short	Cr-V	
39809053	Temper-torx+ magnet		Long		
39809054				S-2	
39809055	Torx		Extra Long	Cr-V	

39809001

39809012

Hex

Hex+ ball point

Hex+ball point +magnet

Torx

Temper-torx

Temper-torx+ magnet

T-Handle Hex wrench set GRING

Code	Type	Set mm	Material	Pcs
39809004	Hex+ ball point	2, 2.5, 3, 4, 5, 6, 8, 10	S2	8

T-Handle Torx wrench set 9 pcs GRING

Code	Type	Set	Material	Pcs
39809005	Torx	T10, T15, T20, T25, T27, T30, T40, T45, T50	S2	9

Hex key wrench set GRING

Code	Type	Length	Set mm	Material	Pcs
39809013	Hex+ ball point +magnet	56.3	1.5, 2, 2.5, 3, 4, 5, 6	S2	7

Torx key wrench set GRING

Code	Type	Length	Set	Material	Pcs
39809015	Torx	56.3	T9, T10, T15, T20, T25, T27, T30, T40	S2	8

Conversion table

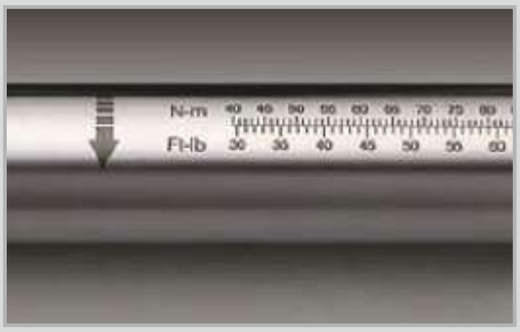

A print-on conversion table for quick reference

Ring scale

Turn knob for accurate and easy adjusting the scale. Unique design grip prevents slipping when turning

Easily readable scale

Convex lens enlarges the scale reading

Ergonomic handle

Ergonomic handle and unique texture prevents fatigues

Screen torque wrench GRING

Code	*Square drive inch*	*Torque range N.m.*	*Fine scale N.m.*	*L mm/Inch*	*B mm*	*Lf mm*	*WT g*
02801072	1/4"DR	5-25	0.1	323/13"	23	248	760
02801075	3/8"DR	20-100	0.5	400/16"	32	325	988
02801078	1/2"DR	60-340	1	620/25"	42	545	1730
02801080	3/4"DR	110-550	2	918/37"	58	790	4528
02801081	3/4"DR	150-750	2.5	1210/49"	58	995	5850
02801083	1"DR	200-1000	2.5	1500/60"	67	1160	7426

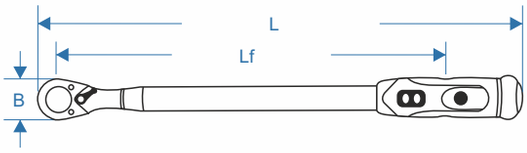

Digital LCD display & Functional panel

1. Buzzer. 2. GREEN LED light. 3. RED LED light.
When applied torque reaches target torque value, the GREEN and RED lights are on and the buzzer beeps continuously. The LCD display shows the maximum applied torque for 15 seconds then indicates 0. When applied torque exceeds the wrench full-scale capacity, the GREEN & RED lights are on and the buzzer beeps continuously.

Battery compartment

Use AA battery only.
1. Unscrew the battery lid of the handle with a PH2 screwdriver. 2. Follow up the instruction to install 2 AA batteries. 3. Screw the battery lid. In order to maintain the best accuracy, please Restart the torque wrench after installing the battery

Electronic digital torque wrench GRING

Code	*Square drive inch*	*Torque range N.m.*	*L mm/Inch*	*B mm*	*Teeth*	*WT g*
02800135	3/8"DR	10 - 135	394/16"	32	48	988
02800200	1/2"DR	20 - 200	569/23"	42	48	1730
02800340	1/2"DR	34 - 340	769/31"	42	48	1730

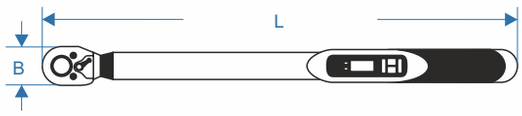

Interchangeable torque wrench GRING

Code	*Fitting size mm*	*Torque range N.m.*	*Fine scale N.m.*	*L mm/Inch*	*B mm*	*Lf mm*	*WT g*
02801137	14 x 18	60 - 340	1	570/23"	41	545	1554
02802137		100 - 600	2	860/35"	58	634	1851
02803137		150 - 800	2.5	1150/46"	58	801	2024

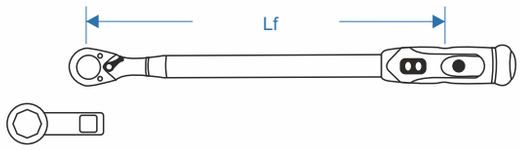

Sinterchangeable torque wrench set GRING

Code	Type	Teeth	Torque range N.m.	Fine scale N.m.
02803138	replaceable nozzles	48	40 - 200	0,5

Set	Pcs
Screen torque wrench 40-200 N.m	1
Open ended torque insert 14x18: 13, 14, 15, 17, 19, 22, 24, 27, 30, 32 mm	10
14x18 Round head ratchet insert 1/2"	1

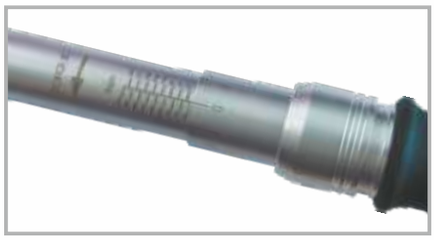

Screen torque wrench GRING

Code	Square drive inch	Torque range N.m.	L mm/Inch	B mm	WT g
02801294	1"DR	300-1500	1700/68"	70	
02801295		350-2000	2000/80"	72	

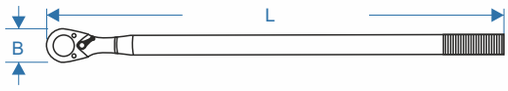

Adjustable torque wrench GRING

Code	Graduation scale N.m.	Torque range N.m.	Max. size of jaw mm	L mm	A mm	WT g
22801010	1	40 - 210	48	620		2300
22801011	2,5	70 - 350	63	833	13-38	2920
22801012	2,5	100 - 500	63	1122		4830

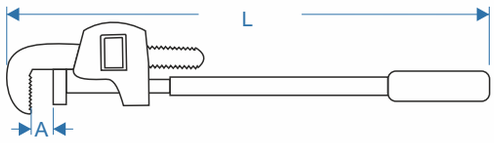

Ratchet nozzle on torque wrench GRING

Code	Fitting size mm	Square drive inch	Teeth	W mm	H mm	C mm	WT g
02801140	14 x 18	1/2"DR	72	39	37.4	34	305
02801141		3/4"DR	52				340

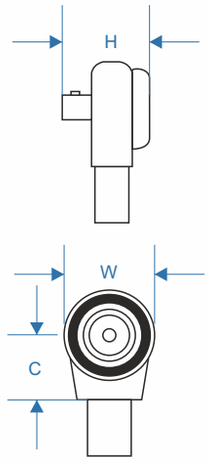

Ring end insert 14x18 mm GRING

Code	Size mm	W mm	H mm	C mm	WT g	Code	Size inch	W mm	H mm	C mm	WT g
02801211	13	21	12	25	130	02801312	1/2"	21	12	25	130
02801212	14	23	12	25	123	02801313	9/16"	23	12	25	123
02801213	15	26	12	25	128	02801314	5/8"	26	12	25	133
02801214	16	26	12	25	133	02801315	11/16"	29,5	12,5	25	134
02801215	17	27,5	12,5	25	135	02801316	3/4"	31	12,5	25	138
02801216	18	29,5	12,5	25	134	02801317	13/16"	33	15	25	144
02801217	19	31	12,5	25	138	02801318	7/8"	35	15	25	145
02801218	21	33	15	25	144	02801319	15/16"	38	15	25	153
02801219	22	35	15	25	145	02801320	1"	42	17,5	31	162
02801220	24	38	15	25	153	02801321	1-1/16"	42	17,5	31	162
02801221	27	42	17,5	31	162						
02801222	30	45,1	17,5	31	182						
02801223	32	48	17,5	31	181						
02801224	34	51	19	31	210						
02801225	36	53	19	31	203						
02801226	41	59,3	19	31	240						

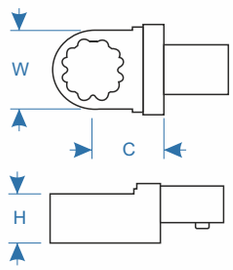

Open end insert 14x18 mm GRING

Code	Size mm	W mm	H mm	C mm	WT g	Code	Size inch	W mm	H mm	C mm	WT g
02801194	13	29,7	7	25	128	02801300	1/2"	29,6	7	25	128
02801195	14	31,1	7	25	129	02801301	9/16"	31,3	7	25	129
02801196	15	33,4	7	25	132	02801302	5/8"	33,4	7	25	140
02801197	16	35,8	9	25	140	02801303	11/16"	38,6	9	25	147
02801198	17	37	9	25	136	02801304	3/4"	40,6	9	25	147
02801199	18	38,6	9	25	147	02801305	13/16"	45,2	11	25	171
02801200	19	40,6	9	25	147	02801306	7/8"	47,3	11	25	165
02801201	21	45,2	11	25	171	02801307	15/16"	50,8	11	25	167
02801202	22	47,3	11	25	165	02801308	1"	58,7	13,5	32,5	219
02801203	24	50,8	11	25	167	02801309	1-1/8"	62,7	13,5	32,5	245
02801204	27	58,7	14	32,5	219	02801310	1-1/4"	65,2	13,5	32,5	246
02801205	30	62,7	14	32,5	245	02801311	1-1/2"	66,5	13,5	32,5	265
02801206	32	65,2	14	32,5	246						
02801207	34	66,5	14	32,5	239						
02801208	36	66,5	14	32,5	275						
02801209	38	66,5	14	32,5	265						
02801210	41	82,5	14	40	307						

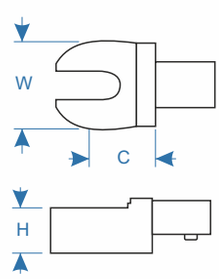

Mini torque multiplier GRING

Code	Drive	Max. input torque N.m.	Max. output torque N.m.	Gear ratio	Torque ratio
02801291	1/2"Fx3/4"M	158 N.m.	1500 N.m.	1 : 16	1 : 9.5

Industrial torque multiplier GRING

Code	Drive	Torque range N.m.	Attention
02801254	1/2"Fx3/4"M	1500	Do not use with power tools, impact wrenches and torque wrenches
02801255	3/4"Fx3/4"M	2000	
02801256	3/4"Fx1"M	3000	

Industrial torque multiplier GRING

Code	Drive	Torque range N.m.	Attention
02801245	1/2"Fx3/4"M	285-1000	Do not use with impsat wrenches
02801246	1/2"Fx3/4"M	395-1500	
02801247	1/2"Fx1"M	215- 2700	
02801248	3/4"Fx1"M	710- 2700	
02801249	3/4"Fx1-1/2"M	938- 4500	
02801250	1/2"Fx1-1/2"M	357- 6000	
02801251	1/2"Fx1-1/2"M	347- 8000	
02801252	3/4"Fx1-1/2"M	433-10000	
02801253	1/2"Fx1-1/2"M	275- 4500	

Easy torque tester GRING

Code	Square drive inch	Torque range N.m.
02801292	1/2"DR	35-350
02801293	3/4"DR	100-1000

Features:
1. Digital value display
2. Three modes and units
3. Automatic shut off in 3 minutes
4. Data save and USB transfer cable
5. Power supplied by batteries or USB transfer cable
6. Suitable for clockwise and counter-clockwise
7. Operation in horizontal or vertical plane

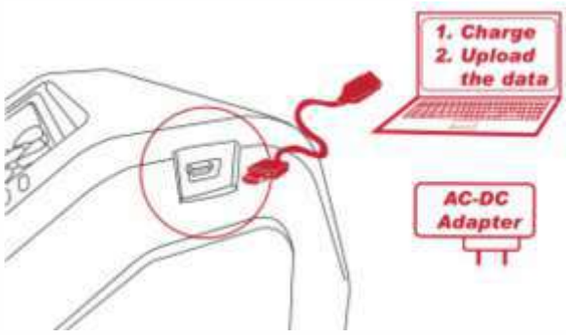

Socket 1/4"DR 6-PT GRING

Regular

Code	mm	L mm	WT g	Code	inch	L mm	WT g
71406001	4	25	10	71406101	5/32"	25	10
71406002	4.5			71406102	3/16"		
71406003	5			71406103	7/32"		
71406004	5.5			71406104	1/4"		11
71406005	6		11	71406105	9/32"		
71406006	7			71406106	5/16"		12
71406007	8		12	71406107	11/32"		15
71406008	9		14	71406108	3/8"		16
71406009	10		16	71406109	7/16"		22
71406010	11		22	71406110	1/2"		28
71406011	12		25	71406111	9/16"		34
71406012	13		28				
71406013	14		34				

Cr-v

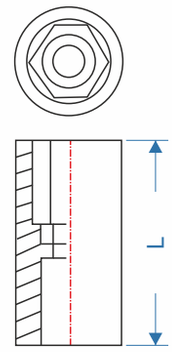

Deep

Code	mm	L mm	WT g	Code	inch	L mm	WT g
71406201	4	50	20	71406301	5/32"	50	20
71406202	4.5			71406302	3/16"		
71406203	5			71406303	7/32"		
71406204	5.5			71406304	1/4"		22
71406205	6		22	71406305	9/32"		24
71406206	7		24	71406306	5/16"		
71406207	8			71406307	11/32"		30
71406208	9		30	71406308	3/8"		38
71406209	10		38	71406309	7/16"		40
71406210	11		42	71406310	1/2"		52
71406211	12		50	71406311	9/16"		
71406212	13		52				
71406213	14		74				

Cr-v

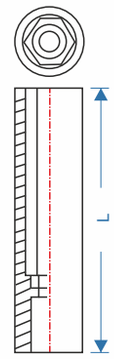

Socket 3/8"DR 6-PT GRING

Regular

Code	mm	L mm	WT g	Code	mm	L mm	WT g	Code	inch	L mm	WT g
73806001	6	28	22	73806012	17	30	59	73806101	1/4"	28	22
73806002	7			73806013	18		68	73806102	5/16"		
73806003	8			73806014	19			73806103	7/16"		24
73806004	9		23	73806015	20		81	73806104	1/2"		26
73806005	10			73806016	21		79	73806105	9/16"		29
73806006	11		24	73806017	22		95	73806106	5/8"		34
73806007	12		25	73806018	23			73806107	11/16"	30	43
73806008	13		29	73806019	24			73806108	3/4"		57
73806009	14		35					73806109	13/16"		68
73806010	15		46					73806110	7/8"		81
73806011	16		43					73806111	15/16"		95

Cr-v

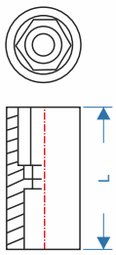

Deep

Code	mm	L mm	WT g	Code	mm	L mm	WT g	Code	inch	L mm	WT g
73806201	6	63	55	73806212	17	63	126	73806301	1/4"	63	49
73806202	7			73806213	18		140	73806302	5/16"		
73806203	8			73806214	19		146	73806303	7/16"		60
73806204	9			73806215	20			73806304	1/2"		77
73806205	10			73806216	21			73806305	9/16"		82
73806206	11		56	73806217	22			73806306	5/8"		99
73806207	12		68	73806218	23			73806307	11/16"		122
73806208	13		75	73806219	24			73806308	3/4"		146
73806209	14		83					73806309	13/16"		
73806210	15		100					73806310	7/8"		
73806211	16							73806311	15/16"		

Cr-v

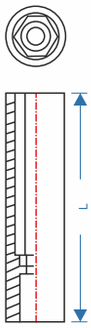

Socket 1/2" DR 6-PT GRING

Regular

Code	mm	L mm	WT g
71206001	8	28	46
71206002	9		
71206003	10		47
71206004	11		48
71206005	12		
71206006	13		50
71206007	14		52
71206008	15		55
71206009	16		52
71206010	17		64
71206011	18		82
71206012	19	30	77
71206013	20		97
71206014	21		95
71206015	22		109
71206016	23		130
71206017	24		127
71206018	25		156
71206019	26		150
71206020	27		178
71206021	28		
71206022	29		
71206023	30		225
71206024	32		245

Code	inch	L mm	WT g
71206101	5/16"	38	48
71206102	3/8"		
71206103	7/16"		
71206104	1/2"		50
71206105	9/16"		51
71206106	5/8"		50
71206107	11/16"		62
71206108	3/4"		77
71206109	13/16"		91
71206110	7/8"		110
71206111	15/16"	40	126
71206112	1"	42	153
71206113	1-1/16"		178
71206114	1-1/8"		200
71206115	1-3/16"		225
71206116	1-1/4"		250
71206117	1-5/16"		

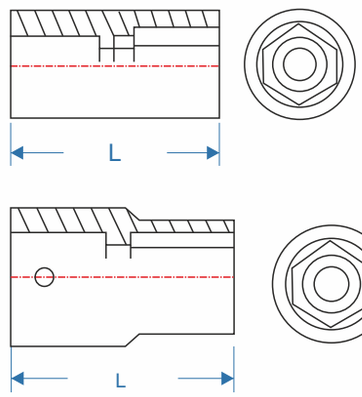

Deep

Code	mm	L mm	WT g
71206201	8	77	94
71206202	9		
71206203	10		96
71206204	11		99
71206205	12		104
71206206	13		110
71206207	14		111
71206208	15		113
71206209	16		106
71206210	17		135
71206211	18		
71206212	19		158
71206213	20		177
71206214	21		178
71206215	22		222
71206216	23		
71206217	24		245
71206218	25		
71206219	26		
71206220	27		295
71206221	28		
71206222	29		
71206223	30		
71206224	32		

Code	inch	L mm	WT g
71206301	5/16"	77	96
71206302	3/8"		
71206303	7/16"		101
71206304	1/2"		110
71206305	9/16"		112
71206306	5/8"		106
71206307	11/16"		133
71206308	3/4"		158
71206309	13/16"		185
71206310	7/8"		219
71206311	15/16"		247
71206312	1"		280
71206313	1-1/16"		295
71206314	1-1/8"		365
71206315	1-3/16"		
71206316	1-1/4"		
71206317	1-5/16"		

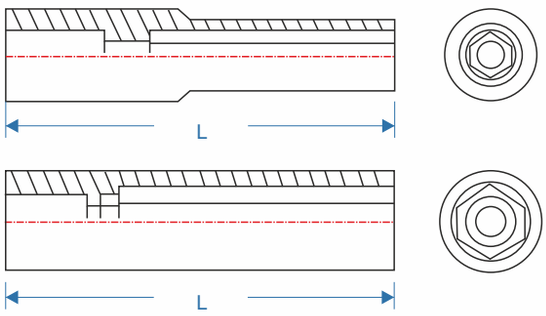

Socket 1/2" DR 12-PT GRING

Regular

Code	mm	L mm	WT g	Code	inch	L mm	WT g
71212001	8	28	46	71212101	5/16"	38	48
71212002	9			71212102	3/8"		
71212003	10		47	71212103	7/16"		
71212004	11		48	71212104	1/2"		50
71212005	12			71212105	9/16"		51
71212006	13		50	71212106	5/8"		50
71212007	14		52	71212107	11/16"		62
71212008	15		55	71212108	3/4"		77
71212009	16		52	71212109	13/16"		91
71212010	17	30	64	71212110	7/8"		110
71212011	18		82	71212111	15/16"	40	126
71212012	19		77	71212112	1"	42	153
71212013	20		97	71212113	1-1/16"		178
71212014	21		95	71212114	1-1/8"		200
71212015	22		109	71212115	1-3/16"		225
71212016	23		130	71212116	1-1/4"		250
71212017	24		127	71212117	1-5/16"		
71212018	25		156				
71212019	26		150				
71212020	27		178				
71212021	28						
71212022	29						
71212023	30		225				
71212024	32		245				

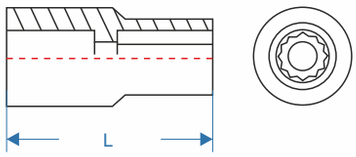

Cr-v

Deep

Code	mm	L mm	WT g	Code	inch	L mm	WT g
71212201	8	77	94	71212301	5/16"	77	96
71212202	9			71212302	3/8"		
71212203	10		96	71212303	7/16"		101
71212204	11		99	71212304	1/2"		110
71212205	12		104	71212305	9/16"		112
71212206	13		110	71212306	5/8"		106
71212207	14		111	71212307	11/16"		133
71212208	15		113	71212308	3/4"		158
71212209	16		106	71212309	13/16"		185
71212210	17		135	71212310	7/8"		219
71212211	18			71212311	15/16"		247
71212212	19		158	71212312	1"		280
71212213	20		177	71212313	1-1/16"		295
71212214	21		178	71212314	1-1/8"		365
71212215	22		222	71212315	1-3/16"		
71212216	23			71212316	1-1/4"		
71212217	24		245	71212317	1-5/16"		
71212218	25						
71212219	26						
71212220	27		295				
71212221	28						
71212222	29						
71212223	30						
71212224	32						

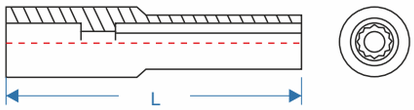

Cr-v

Socket regular 3/4" DR 12-PT GRING

Code	mm	L mm	WT g
73412001	17	50	140
73412002	18		150
73412003	19		160
73412004	20		170
73412005	21		180
73412006	22		210
73412007	23		
73412008	24	51	220
73412009	25	52	
73412010	26		230
73412011	27		
73412012	28		240
73412013	29		250
73412014	30	54	270
73412015	31	56	280
73412016	32		290
73412017	33		320
73412018	34		340
73412019	35	58	370
73412020	36		400
73412021	38	60	470
73412022	40	62	520
73412023	41	64	540
73412024	42		560
73412025	44	66	600
73412026	46	68	650
73412027	48	70	700
73412028	50	72	800
73412029	54	74	850
73412030	55	76	900
73412031	58	78	1000
73412032	60		1050

Code	inch	L mm	WT g
73412101	3/4"	50	160
73412102	13/16"		180
73412103	7/8"		210
73412104	15/16"	51	220
73412105	1"	52	
73412106	1-1/16"		
73412107	1-1/8"		240
73412108	1-3/16"	54	260
73412109	1-1/4"	56	290
73412110	1-5/16"		320
73412111	1-3/8"	58	370
73412112	1-7/16"		400
73412113	1-1/2"	60	470
73412114	1-9/16"	62	510
73412115	1-5/8"	64	540
73412116	1-11/16"	65	580
73412117	1-3/4"	66	620
73412118	1-13/16"	68	650
73412119	1-7/8"	70	740
73412120	1-15/16"		770
73412121	2"	72	800
73412122	2-1/16"		820
73412123	2-1/8"	74	850
73412124	2-3/16"	76	900
73412125	2-1/4"		950
73412126	2-5/16"	78	1000
73412127	2-3/8"		1050
73412128	2-7/16"	80	1150
73412129	2-1/2"	82	1200

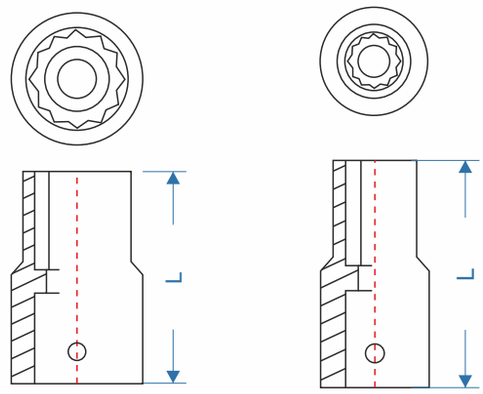

Cr-v

Socket regular 3/4" DR 6-PT GRING

Code	mm	L mm	WT g
73406001	17	50	140
73406002	18		150
73406003	19		160
73406004	20		170
73406005	21		180
73406006	22		210
73406007	23		
73406008	24	51	220
73406009	25	52	
73406010	26		230
73406011	27		
73406012	28		240
73406013	29		250
73406014	30	54	270
73406015	31	56	280
73406016	32		290
73406017	33		320
73406018	34		340
73406019	35	58	370
73406020	36		400
73406021	38	60	470
73406022	40	62	520
73406023	41	64	540
73406024	42		560
73406025	44	66	600
73406026	46	68	650
73406027	48	70	700
73406028	50	72	800
73406029	54	74	850
73406030	55	76	900
73406031	58	78	1000
73406032	60		1050

Code	inch	L mm	WT g
73406101	3/4"	50	160
73406102	13/16"		180
73406103	7/8"		210
73406104	15/16"	51	220
73406105	1"	52	
73406106	1-1/16"		
73406107	1-1/8"		240
73406108	1-3/16"	54	260
73406109	1-1/4"	56	290
73406110	1-5/16"		320
73406111	1-3/8"	58	370
73406112	1-7/16"		400
73406113	1-1/2"	60	470
73406114	1-9/16"	62	510
73406115	1-5/8"	64	540
73406116	1-11/16"	65	580
73406117	1-3/4"	66	620
73406118	1-13/16"	68	650
73406119	1-7/8"	70	740
73406120	1-15/16"		770
73406121	2"	72	800
73406122	2-1/16"		820
73406123	2-1/8"	74	850
73406124	2-3/16"	76	900
73406125	2-1/4"		950
73406126	2-5/16"	78	1000
73406127	2-3/8"		1050
73406128	2-7/16"	80	1150
73406129	2-1/2"	82	1200

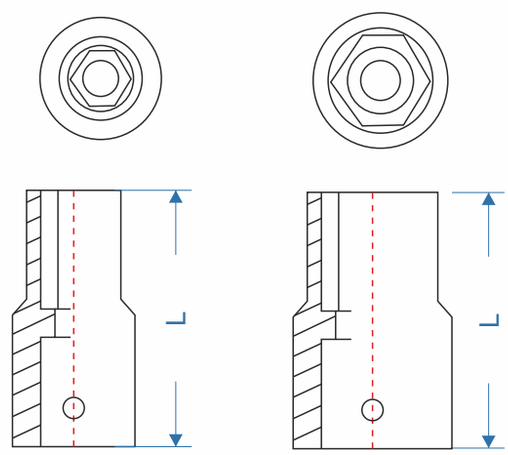

Cr-v

Socket 1"DR 6-PT GRING

Regular

Code	mm	L mm	WT g
71006001	36	65	470
71006002	38		520
71006003	41	70	570
71006004	46	75	870
71006005	50		1050
71006006	54	80	1100
71006007	55		1250
71006008	58		1300
71006009	60	84	1500
71006010	63	87	1660
71006011	65		
71006012	67	90	1800
71006013	70	93	2200
71006014	71		2280
71006015	75	97	2400
71006016	77	103	2600
71006017	80		2720

Cr-v

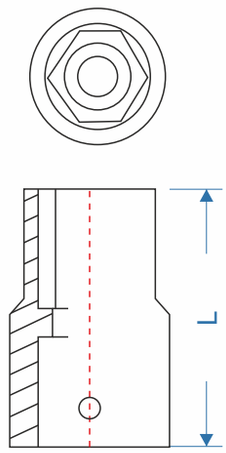

Socket 1"DR 12-PT GRING

Regular

Code	mm	L mm	WT g
71012001	35	61	430
71012002	36	65	460
71012003	38		485
71012004	41	70	560
71012005	46	75	830
71012006	50		1035
71012007	54	80	1150
71012008	55		1180
71012009	58		1285
71012010	60	84	1370
71012011	63	87	1500
71012012	65		1570
71012013	67	90	1640
71012014	70	93	2000
71012015	71		2100
71012016	75	97	2350
71012017	77	103	2500
71012018	80		2600

Code	inch	L mm	WT g
71012101	1-3/8"	61	430
71012102	1-7/16"	65	450
71012103	1-1/2"		500
71012104	1-5/8"	70	550
71012105	1-11/16"		690
71012106	1-3/4"	75	780
71012107	1-13/16"		870
71012108	1-7/8"		980
71012109	2"		1000
71012110	2-1/16"	80	1110
71012111	2-1/8"		1170
71012112	2-3/16"		1220
71012113	2-1/4"		1280
71012114	2-5/16"		1340
71012115	2-3/8"	84	1450
71012116	2-7/16"	87	1480
71012117	2-1/2"		1580
71012118	2-9/16"	90	1690
71012119	2-5/8"		1720
71012120	2-11/16"	93	1950
71012121	2-3/4"		2000
71012122	2-13/16"		2100
71012123	2-7/8"	97	2210
71012124	2-15/16"		2330
71012125	3"	103	2640
71012126	3-1/8"		2700

Cr-v

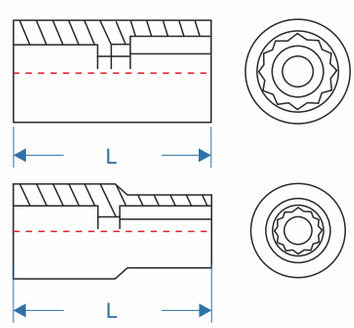

Impact socket 1/2"DR 6-PT GRING

Regular

Code	mm	L mm	L2 mm	D2 mm
01206002	8	38	9	25
01206003	9		12	
01206004	10			
01206005	11			
01206006	12			
01206007	13			
01206008	14			
01206009	15			30
01206010	16			
01206011	17		13	
01206012	18			
01206013	19			
01206014	20			
01206015	21			
01206016	22			
01206017	23			
01206018	24	40		
01206019	25			
01206020	26	43		
01206021	27			
01206022	28			
01206023	29			
01206024	30			
01206025	32			

Code	inch	L mm	L2 mm	D2 mm
01206201	5/16"	38	9	25
01206202	3/8"			
01206203	7/16"		12	
01206204	1/2"			
01206205	9/16"			
01206206	5/8"			30
01206207	11/16"			
01206208	3/4"			
01206209	13/16"		13	
01206210	7/8"			
01206211	15/16"	40		
01206212	1"			
01206213	1-1/16"	43		
01206214	1-1/8"			
01206215	1-3/16"			
01206216	1-1/4"			
01206217	1-5/16"	46		
01206218	1-3/8"	50		

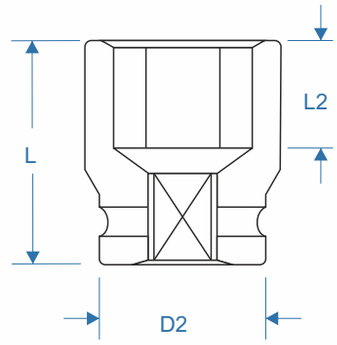

Cr-mo

Deep

Code	mm	L mm	L2 mm	D2 mm
01206101	8	78	22	25
01206102	9		26	
01206103	10			
01206104	11			
01206105	12			
01206106	13			
01206107	14		30	
01206108	15			30
01206109	16			
01206110	17			
01206111	18			
01206112	19		36	
01206113	20			
01206114	21			
01206115	22			
01206116	23			
01206117	24			
01206118	25		38	
01206119	26			
01206120	27			
01206121	28			
01206122	29			
01206123	30			
01206124	32		40	
01206126	34			
01206128	36			

Code	inch	L mm	L2 mm	D2 mm
01206201	5/16"	78	22	25
01206202	3/8"		26	
01206203	7/16"			
01206204	1/2"			
01206205	9/16"			
01206206	5/8"		30	30
01206207	11/16"			
01206208	3/4"		36	
01206209	13/16"			
01206210	7/8"			
01206211	15/16"			
01206212	1"			
01206213	1-1/16"		38	
01206214	1-1/8"			
01206215	1-3/16"		40	
01206216	1-1/4"			
01206217	1-5/16"			
01206218	1-3/8"			
01206219	1-7/16"			
01206220	1-1/2"			

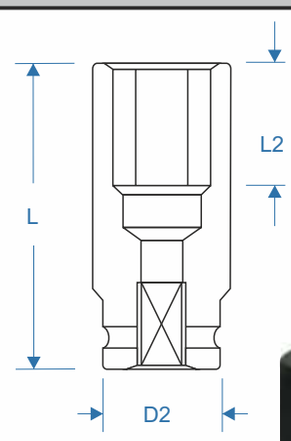

Cr-mo

Impact socket 3/4"DR 6-PT GRING

Regular

Code	mm	L mm	L2 mm	D2 mm
03406005	17	56	50	38
03406006	18		52	
03406007	19			
03406008	20			
03406009	21			
03406010	22			
03406011	23			
03406012	24			
03406013	25			
03406014	26			
03406015	27			40
03406016	28			42
03406017	29			
03406018	30			44
03406019	32			
03406020	33		56	
03406021	34			
03406022	35			
03406023	36			
03406024	37			
03406025	38			
03406027	40		62	
03406028	41		58	
03406033	46		63	
03406037	50		72	54
03406040	55		74	
03406045	60		80	
03406047	65			
03406049	70		85	

Code	inch	L mm	L2 mm	D2 mm
03406204	11/16"	50	20	38
03406205	3/4"	52		
03406206	13/16"			
03406207	7/8"			
03406208	15/16"			
03406209	1"			
03406210	1-1/16"			40
03406211	1-1/8"		27	42
03406212	1-3/16"			44
03406213	1-1/4"			
03406214	1-5/16"	56		
03406215	1-3/8"			
03406216	1-7/16"		30	
03406217	1-1/2"			
03406218	1-9/16"	62		
03406219	1-5/8"			
03406220	1-11/16"			
03406221	1-3/4"			
03406222	1-13/16"	68	33	
03406223	1-7/8"		35	
03406224	1-15/16"	70		54
03406225	2"	72		
03406226	2-1/16"			
03406227	2-1/8"		38	

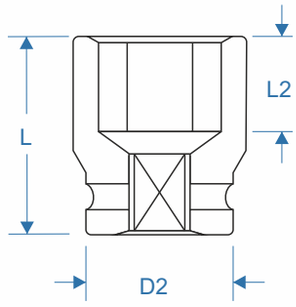

Cr-mo

Deep

Code	mm	L mm	L2 mm	D2 mm
03406105	17	90	32	38
03406106	18		34	
03406107	19		35	
03406108	20			
03406109	21		38	
03406110	22			
03406111	23		40	
03406112	24		44	
03406113	25			
03406114	26			
03406115	27		45	40
03406116	28			42
03406117	29		55	
03406118	30			44
03406119	32			
03406120	33			
03406121	34			
03406122	35			
03406123	36			
03406124	37			
03406125	38	92		
03406127	40			
03406128	41			
03406133	46			
03406137	50	95		54
03406140	55	100		
03406144	60	105		
03406146	65			
03406147	70			

Code	inch	L mm	L2 mm	D2 mm
03406304	11/16"	90	35	38
03406305	3/4"			
03406306	13/16"		42	
03406307	7/8"			
03406308	15/16"			
03406309	1"			
03406310	1-1/16"			40
03406311	1-1/8"			42
03406312	1-3/16"		45	44
03406313	1-1/4"			
03406314	1-5/16"			
03406315	1-3/8"		55	
03406316	1-7/16"			
03406317	1-1/2"	92		
03406318	1-9/16"			
03406319	1-5/8"			
03406320	1-11/16"			
03406321	1-3/4"			
03406322	1-13/16"			
03406323	1-7/8"			
03406324	1-15/16"			
03406325	2"	95		54
03406326	2-1/16"			
03406327	2-1/8"	100		

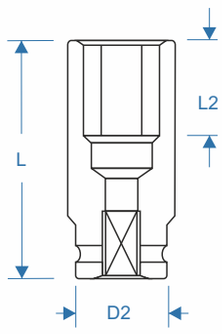

Cr-mo

Impact socket 1"DR 6-PT GRING

Regular

Code	mm	L mm	L2 mm	D2 mm
01006001	17	60	14	51
01006002	18			
01006003	19			
01006004	20		15	
01006005	21		16	
01006006	22			
01006007	23		17	
01006008	24		18	
01006009	25			
01006010	26			
01006011	27		19	
01006012	28			
01006013	29			
01006014	30		21	
01006015	32	65	22	
01006016	33			52
01006017	34			54
01006018	35			
01006019	36		25	
01006020	37			
01006021	38	70	30	
01006024	41			
01006025	42			
01006029	46			
01006031	48			
01006033	50	80	40	
01006038	55			
01006043	60			
01006046	65		48	
01006047	70	90		
01006048	75			86
01006051	80		55	
01006052	85	100		
01006053	90			
01006054	95			
01006055	100			95
01006056	105	110		
01006057	110		58	
01006058	115	120	65	
01006059	120			

Code	inch	L mm	L2 mm	D2 mm
01006202	11/16"	60	14	51
01006203	3/4"			
01006204	13/16"		16	
01006205	7/8"			
01006206	15/16"		18	
01006207	1"			
01006208	1-1/16"		19	
01006209	1-1/8"			
01006210	1-3/16"		21	
01006211	1-1/4"	65	22	
01006212	1-5/16"			52
01006213	1-3/8"			54
01006214	1-7/16"		25	
01006215	1-1/2"	70	30	
01006216	1-9/16"			
01006217	1-5/8"			
01006218	1-11/16"			
01006219	1-3/4"			
01006220	1-13/16"			
01006221	1-7/8"			
01006222	1-15/16"			58
01006223	2"	80	40	
01006224	2-1/16"			
01006225	2-1/8"			
01006226	2-3/16"			
01006227	2-1/4"			62
01006228	2-5/16"			
01006229	2-3/8"			
01006230	2-7/16"			
01006231	2-1/2"			
01006232	2-9/16	90	48	
01006233	2-5/8"			
01006234	2-11/16"			
01006235	2-3/4"			
01006236	2-13/16"			
01006237	2-7/8"			
01006238	2-15/16"			86
01006239	3"			
01006241	3-1/8"	100	55	

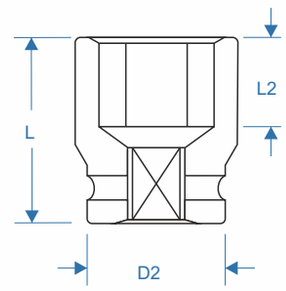

Cr-mo

Impact socket 1"DR 6-PT GRING

Deep

Code	*mm*	*L mm*	*L2 mm*	*D2 mm*
01006101	17	110	35	51
01006102	18			
01006103	19			
01006104	20		36	
01006105	21			
01006106	22		37	
01006107	23			
01006108	24		38	
01006109	25		39	
01006110	26		40	
01006111	27			
01006112	28		42	
01006113	29		43	
01006114	30		50	
01006115	32		53	
01006116	33		55	52
01006117	34		56	54
01006118	35		57	
01006119	36			
01006120	37		65	
01006121	38			
01006124	41			
01006125	42		66	
01006129	46		67	
01006131	48		68	
01006133	50	150	105	
01006138	55			
01006143	60			
01006146	65		110	
01006147	70			86
01006148	75			
01006151	80			
01006152	85			
01006153	90			
01006154	95			
01006155	100			

Code	*inch*	*L mm*	*L2 mm*	*D2 mm*
01006302	11/16"	110	35	51
01006303	3/4"			
01006304	13/16"			
01006305	7/8"		36	
01006306	15/16"			
01006307	1"		37	
01006308	1-1/16"			
01006309	1-1/8"		38	
01006310	1-3/16"		39	
01006311	1-1/4"		40	
01006312	1-5/16"			
01006313	1-3/8"		42	
01006314	1-7/16"		43	
01006315	1-1/2"		50	
01006316	1-9/16"		53	
01006317	1-5/8"		55	52
01006318	1-11/16"		56	54
01006319	1-3/4"		57	
01006320	1-13/16"			
01006321	1-7/8"		65	
01006322	1-15/16"			
01006323	2"			
01006324	2-1/16"		66	
01006325	2-1/8"		67	
01006326	2-3/16"		68	
01006327	2-1/4"			
01006328	2-5/16"			
01006329	2-3/8"			
01006330	2-7/16"	150	110	
01006331	2-1/2"			86
01006332	2-9/16			
01006333	2-5/8"			
01006334	2-11/16"			
01006335	2-3/4"			
01006336	2-13/16"			
01006337	2-7/8"			
01006338	2-15/16"		115	
01006339	3"			
01006341	3-1/8"			

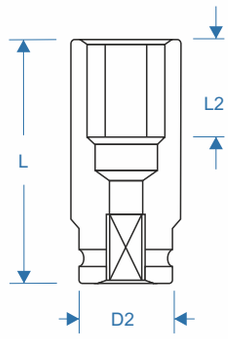

Cr-mo

Impact socket 1-1/2"DR 6-PT GRING

Regular

Code	mm	L mm	L2 mm	D2 mm
11206001	30	78	35	86
11206002	32			
11206003	36			
11206004	38			
11206005	41	80	37	
11206006	42			
11206007	45	84	40	
11206008	46			
11206009	47			
11206010	48			
11206011	50	87		
11206012	52			
11206013	54			
11206014	55	90		
11206015	56			
11206016	58			
11206017	60	92	50	
11206018	65	95		
11206019	70	100	51	
11206020	75	103	52	
11206021	80	110		
11206022	85	118	55	
11206023	90			95
11206024	95			
11206025	100	125		
11206026	105			
11206027	110			
11206028	115	135	65	
11206029	120			
11206030	125			
11206031	130	145	75	127
11206032	135	150		
11206033	140			
11206034	145			
11206035	150		80	
11206036	155			
11206037	160	175		

Code	inch	L mm	L2 mm	D2 mm
11206201	1-3/16"	78	35	86
11206202	1-1/4"			
11206203	1-5/16"			
11206204	1-3/8"			
11206205	1-7/16"			
11206206	1-1/2"			
11206207	1-9/16"	80	37	
11206208	1-5/8"			
11206209	1-11/16"	84	40	
11206210	1-3/4"			
11206211	1-13/16"			
11206212	1-7/8"			
11206213	1-15/16"	87		
11206214	2"1-1/2"			
11206215	2-1/16"			
11206216	2-1/8"	90		
11206217	2-3/16"1			
11206218	2-1/4"			
11206219	2-5/16"			
11206220	2-3/8"			
11206221	2-7/16"			
11206222	2-1/2"			
11206223	2-9/16"			
11206224	2-5/8"			
11206225	2-11/16"	92	50	
11206226	2-3/4"	95		
11206227	2-13/16"	100	51	
11206228	2-7/8"	103	52	
11206229	2-15/16"	110	55	
11206230	3"			
11206231	3-1/16"			
11206232	3-1/8"			
11206233	3-3/16"			
11206234	3-1/4"			
11206235	3-5/16"	118	65	
11206236	3-3/8"			
11206237	3-7/16"			

Code	inch	L mm	L2 mm	D2 mm
11206238	3-1/2"	118	65	86
11206239	3-9/16"		75	
11206240	3-5/8"			
11206241	3-11/16"			
11206242	3-3/4"			95
11206243	3-13/16"	125	80	
11206244	3-7/8"			
11206246	3-15/16"			
11206247	4"			
11206248	4-1/16"			
11206249	4-1/8"			
11206250	4-3/16"			
11206251	4-1/4"			
11206252	4-5/16"			
11206253	4-3/8"			
11206254	4-7/16"			
11206255	4-1/2"	135		
11206256	4-5/8"			
11206257	4-3/4"			
11206245	5"	145		127

Cr-mo

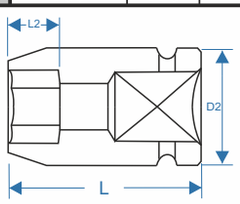

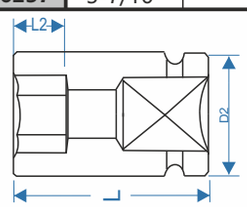

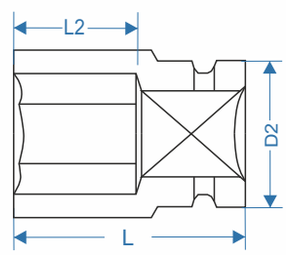

Deep

Code	mm	L mm	L2 mm	D2 mm
11206101	41	115	25	86
11206102	46		29	
11206103	50	135	30	
11206104	55	140	34	
11206105	60	150	35	
11206106	65			
11206107	70	160		
11206108	75			
11206109	80	170	38	
11206110	85		41	
11206111	90		44	
11206112	95	180	46	95
11206113	100	190	48	
11206114	105		51	
11206115	110	200	54	
11206116	115		56	
11206117	120	210	58	

Cr-mo

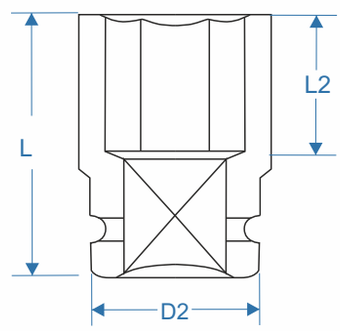

Impact socket 2-1/2"DR 6-PT GRING

Regular

Code	mm	L mm	D2 mm
21206001	75	140	38
21206002	80		
21206003	85		
21206004	90	145	
21206005	95		
21206006	100	150	
21206007	105	155	
21206008	110	160	
21206009	115	165	
21206010	120	170	
21206011	125	175	40
21206012	130		42
21206013	135	180	
21206014	140		44
21206015	145	185	
21206016	150		
21206017	155	190	
21206018	160		
21206019	165	195	
21206020	170		
21206021	175	200	
21206022	180		
21206023	185	210	
21206024	190		
21206025	200	220	
21206026	210	225	54
21206027	215		
21206028	220		
21206029	230		
21206030	235		
21206031	240		
21206032	250		
21206033	255		
21206034	260		

Code	inch	L mm	D2 mm
21206101	3"	140	127
21206102	3-1/8"		
21206103	3-1/4"		
21206104	3-3/8"		
21206105	3-1/2"		
21206106	3-5/8"	145	
21206107	3-3/4"		
21206108	3-7/8"	150	
21206109	4"		
21206110	4-1/8"	155	
21206111	4-1/4"	160	
21206112	4-3/8"	165	
21206113	4-1/2"		
21206114	4-5/8"	170	
21206115	4-3/4"		
21206116	4-7/8"	175	
21206117	5"		
21206118	5-1/8"		
21206119	5-1/4"		
21206120	5-3/8"	180	
21206121	5-1/2"		
21206133	5-5/8"	185	
21206134	5-3/4"		
21206135	5-7/8"		
21206136	6"		
21206137	6-1/8"	190	
21206138	6-1/4"		
21206139	6-3/8"	195	
21206140	6-1/2"		
21206141	6-5/8"		
21206142	6-3/4"		
21206122	6-7/8"	200	
21206123	7"		
21206124	7-1/2"	210	
21206125	7-5/8"		
21206126	7-7/8"	220	
21206127	8"		
21206128	8-3/4"	225	152
21206129	9-1/8"		
21206130	9-1/2"		
21206131	9-7/8"		
21206132	10-1/4"		

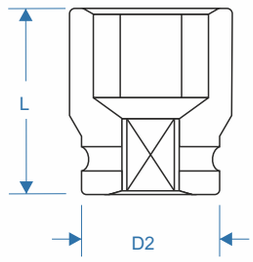

Cr-mo

Sockets sets

Impact socket set 1/2"DR 6-PT GRING

Code	Set mm	Pcs
76728052	8, 10, 11, 12, 13, 14, 15, 16, 17, 18, 19, 20, 21, 22, 23, 24, 25, 26, 27, 28, 29, 30, 32	23

Cr-mo

Impact socket deep set 1/2"DR 6-PT GRING

Code	Set mm	Pcs
76728053	8, 10, 11, 12, 13, 14, 15, 16, 17, 18, 19, 20, 21, 22, 23, 24, 25, 26, 27, 28, 29, 30, 32, 34, 36	25

Cr-mo

Impact universal socket set 1/2"DR 6-PT GRING

Code	Set mm	Pcs
76728021	10, 12, 13, 14, 15, 17, 19, 21, 22, 24	10
Code	**Set inch**	**Pcs**
76728022	3/8", 7/16", 1/2", 9/16", 5/8", 11/16", 3/4", 13/16", 7/8", 15/16", 1", 1-1/16", 1-1/8", 1-3/16", 1-1/4"	15

Cr-mo

Impact universal socket set 1/2"DR 6-PT GRING

Code	Set mm	Pcs
76728023	10, 12, 13, 14, 15, 17, 19, 21, 22, 24	10
Code	**Set inch**	**Pcs**
76728024	3/8", 7/16", 1/2", 9/16", 5/8", 11/16", 3/4", 13/16",7/8", 15/16", 1"	11

Cr-mo

Drive hex impact set 1/2" DR GRING

Code	Set mm	Pcs
76728056	4, 5, 6, 7, 8, 9 , 10, 11, 12, 13, 14, 15, 16, 17, 18, 19, 21, 22 mm	18
Code	**Set inch**	**Pcs**
76728057	3/16", 7/32", 1/4, 9/32", 5/16", 3/8", 7/16", 1/2", 9/16", 5/8", 11/16", 3/4"	12

Cr-mo

Drive Torx impact set 1/2" DR GRING

Code	Set mm	Pcs
76728058	T15, T20, T25, T27, T30, T35, T40, T45, T50, T55, T60, T70, T80	13

Cr-mo

Drive hex impact set 3/4" DR GRING

Code	Set mm	Pcs
76728036	10, 12, 14, 17, 19, 21, 22, 24, 27, 30, 32	11
Code	**Set inch**	**Pcs**
76728054	3/8", 7/16", 1/2", 9/16", 5/8", 3/4", 13/16", 7/8",15/16", 1", 1-1/16", 1-1/8",1-3/16",1-1/4"	14

Cr-mo

Drive hex impact set 1" DR GRING

Code	Set mm	Pcs
76728037	14, 17, 19, 21, 22, 24, 27, 30, 32, 36	10
Code	**Set inch**	**Pcs**
76728055	9/16", 11/16", 3/4, 13/16", 7/8", 15/16", 1-1/16", 1-3/16", 1-1/4", 1-7/16"	10

Cr-mo

Sockets set 3/8"DR 6-PT GRING

Code	Set mm	Pcs
76728008	8, 9, 10, 11, 12, 13, 14, 15, 6, 17, 18, 19	12

Cr-v

Sockets set 1/2"DR12-PT GRING

Code	Set mm	Pcs
76728009	13, 14, 15, 16, 17, 18, 19, 21, 22, 24, 27, 30, 32	13

Cr-v

Socket deep set 1/4"DR 6-PT GRING

Code	Set Mm	Pcs
76728044	4, 5, 6, 7, 8, 9, 10, 11, 12, 13, 14	11
Code	**Set inch**	**Pcs**
76728045	5/32", 3-16", 7/32", 1/4", 9/32", 5/16", 11/32", 3/8", 7/16", 1/2", 9/16"	11

Cr-v

Socket set 3/8"DR 6-PT GRING

Code	Set Mm	Pcs
76728061	6, 8, 10, 12, 13, 14, 15, 17, 19, 21, 24	11
Code	**Set inch**	**Pcs**
76728062	1/4", 5/16", 7/16", 1/2", 9/16", 5/8", 11/16", 3/4", 13/16", 7/8", 15/16"	11

Cr-v

Socket set 3/8"DR 6-PT GRING

Code	Set Mm	Pcs
76728046	6, 8, 10, 12, 13, 14, 15, 17, 19, 21, 24	11
Code	**Set inch**	**Pcs**
76728047	1/4", 5/16", 7/16", 1/2", 9/16", 5/8", 11/16", 3/4", 13/16", 7/8", 15/16"	11

Cr-v

Socket set 1/4"DR 6-PT GRING

Code	Set Mm	Pcs
76728042	4, 5, 6, 7, 8, 9, 10, 11, 12, 13, 14	11
Code	**Set inch**	**Pcs**
76728043	5/32", 3-16", 7/32", 1/4", 9/32", 5/16", 11/32", 3/8", 7/16", 1/2", 9/16"	11

Cr-v

Socket deep set 1/2"DR 6-PT GRING

Code	Set Mm	Pcs
76728050	8, 10, 12, 13, 14, 15, 17, 19, 21, 24, 27, 30, 32	13
Code	**Set inch**	**Pcs**
76728051	5/16", 3/8", 7/16", 1/2", 9/16", 5/8", 11/16", 3/4", 13/16", 7/8", 15/16", 1", 1-1/16", 1-1/8", 1-3/16", 1-1/4", 1-5/16"	17

Cr-v

Socket set 1/2"DR 6-PT GRING

Code	Set Mm	Pcs
76728048	8, 10, 12, 13, 14, 15, 17, 19, 21, 24, 27, 30, 32	13
Code	**Set inch**	**Pcs**
76728049	5/16", 3/8", 7/16", 1/2", 9/16", 5/8", 11/16", 3/4", 13/16", 7/8", 15/16", 1", 1-1/16", 1-1/8", 1-3/16", 1-1/4", 1-5/16"	17

Cr-v

Spherical gear drive socket set 1/2"DR 12-PT GRING

Code	Set Mm	Pcs
76728010	10, 11, 12, 13, 14, 15, 16, 17, 18, 19, 20, 21, 22, 24, 27, 30, 32	17
Code	**Set inch**	**Pcs**
76728011	3/8", 7/16", 1/2", 9/16", 5/8", 11/16", 3/4", 13/16", 7/8", 15/16", 1", 1-1/16", 1-1/8", 1-3/16", 1-1/4"	15

Cr-v

Spherical gear drive deep socket set 1/2"Dr 12-PT GRING

Code	Set Mm	Pcs
76728012	10, 12, 13, 14, 15, 17, 19, 21, 22, 23, 24, 25	16
Code	**Set inch**	**Pcs**
76728013	3/8", 7/16", 1/2", 9/16", 5/8", 11/16", 3/4", 13/16", 7/8", 15/16", 1"	11

Cr-v

Twister handle ratchet GRING

Code	Square drive inch	L mm/Inch	Teeth	WT g
05504019	1/4"DR	180/7"	60	181
05504020	3/8"DR	240/10"		384
05504021	1/2"DR	290/12"		645

Cr-v

Square drive part with rotating function

Ruber grip handle

Ratchet handle GRING

Code	Square drive inch	L mm/Inch	Teeth	WT g
05504007	1/4"DR	125/5"	48	100
05504008	3/8"DR	200/8"		280
05504009	1/2"DR	200/8"		540

Cr-v

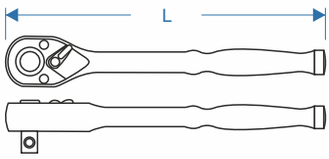

Extendable ratchet handle GRING

Code	Square drive inch	L min mm/Inch	L max mm/Inch	Teeth	WT g
05503053	1/2"DR	295/11"	425/17"	72	567

Cr-v

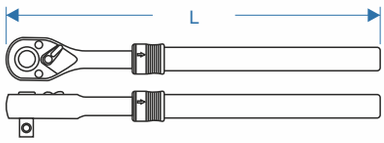

Flex ratchet handle GRING

Code	Square driveinch	L mm/Inch	Teeth	WT g
05504013	1/4"DR	160/6"	48	140
05504014	3/8"DR	300/12"		390
05504015	1/2"DR	425/17"		950

Cr-v

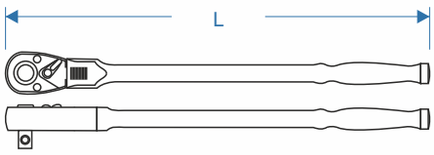

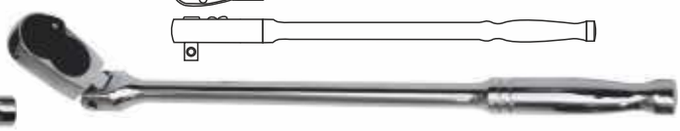

Ratchet handle GRING

Code	Square drive inch	L mm/Inch	Teeth	WT g
05502052	3/4"DR	500/20"	24	2550
05502253	1"DR	650/26"		4410

Cr-v

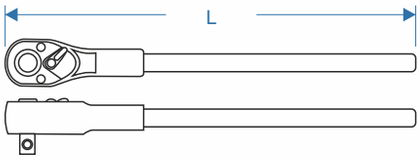

Quick release ratchet head GRING

Code	Square drive inch	L mm/Inch	Teeth	WT g
05502056	1"DR	500/20"	40	2400

Cr-v

Heavy duty spinner handle GRING

Code	Square drive inch	L mm/Inch	WT g
05502100	1/4"DR	100/4"	107

Cr-v

Universal adjustable handle GRING

Code	L min mm/Inch	L max mm/Inch	WT g
05603051	500/20"	814/32"	2450

Cr-v

Reversible ratchet head GRING

Code	Square drive inch	L mm/Inch	Teeth	WT g
05603052	3/4"DR	150/6"	40	1520

Cr-v

Universal flex head GRING

Code	Square drive inch	L mm/Inch	WT g
05603053	3/4"DR	138/ 5-7/16"	815

Cr-v

3/4" DR Drive 5 in 1 adjustable handle set 6 pcs GRING

Code	Set	L mm/Inch	Pcs
05603054	Universal adjustable handle	500/20"-900/36"	1
	Reversible ratchet head (40teeth)	150/6"	1
	Universal flex head	138/ 5-7/16"	1
	Extention bar	100/4"	1
	Sliding T-head	62/ 2-7/16"	1
	Adaptor: 3/4"F x 1"M	62/2"	1

Cr-v

Socket accessories

T-bar head GRING

Code	Square drive inch	L mm/Inch	WT g
05502097	1/2"DR	58/2"	150
05502098	3/4"DR	62/2"	500
05502099	1"DR	70/3"	1100

Extension bar GRING

Code	Square drive inch	L mm/Inch	WT g
05502072	1/4"DR	75/3"	33
05502073		100/4"	42
05502074		150/ 6"	63
05502075	3/8"DR	75/3"	74
05502076		150/6"	143
05502077		250/10"	232
05502080	1/2"DR	75/3"	119
05502081		125/5"	196
05502082		250/10"	383
05502083		500/20"	930
05502286	3/4"DR	100/4"	386
05502287		125/5"	567
05502086		200/8"	634
05502087		400/16"	1154
05502289	1"DR	150/6"	1100
05502088		200/8"	1350
05502089		400/16"	2480

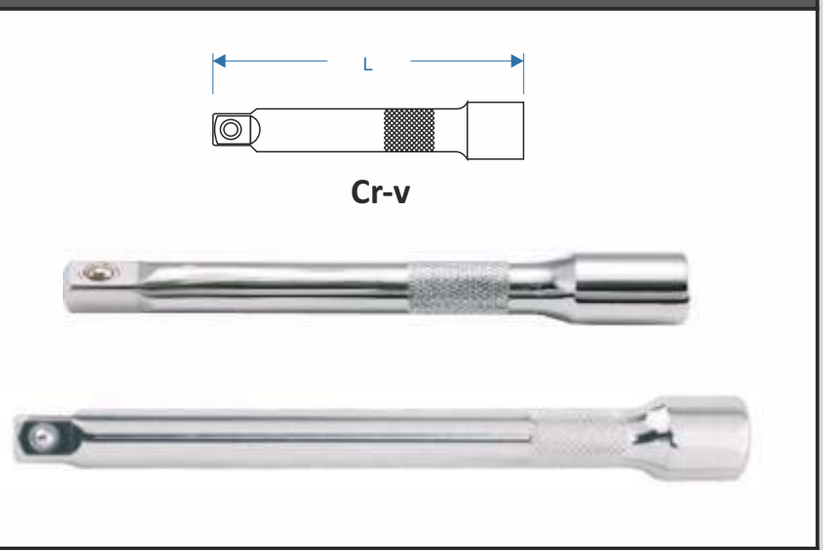

Flexible t-handle GRING

Code	Square drive inch	L mm/Inch	WT g
05502057	1/4"DR	150/6"	113
05502058	3/8"DR	200/8"	273
05502060	1/2"DR	400/16"	451
05502061		600/24"	578
05502062	3/4"DR	475/19"	703
05502063	1"DR	650/26"	1868

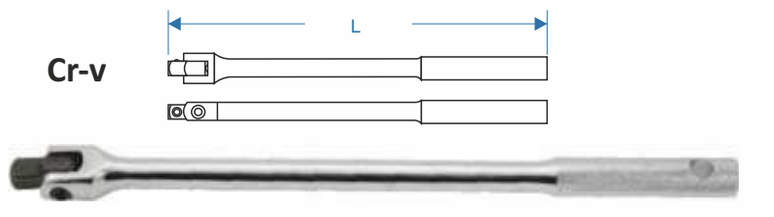

Sliding t-bar GRING

Code	Square drive inch	L mm/Inch	W mm	WT g
05502064	1/4"DR	100/4"	23,5	45
05502065	3/8"DR	200/8"	33,5	128
05502066	1/2"DR	250/10"	41,5	316
05502067	3/4"DR	475/19"	60	1380
05502267	1"DR	550/22"		1490

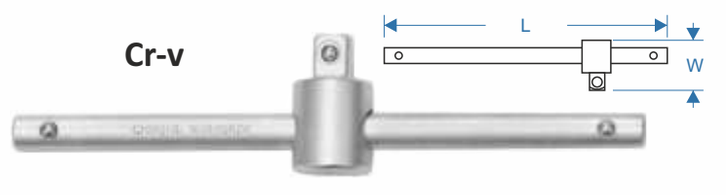

L-shape handle GRING

Code	Square drive inch	L mm/Inch	W mm	WT g
05502096	1/2"DR	250/10"	77	1400
05502294	3/4"DR	300/12"	90	1970
05502095		450/18"	102	2007

Flexibl bar GRING

Code	Square drive inch	L mm/Inch	WT g
05502112	1/4"DR	100/4"	42

Impact extension bar GRING

Code	Square drive inch	L mm/Inch	D mm	Shape
65533040	1/2" DR	125/5"	25	1
65533041		250/10"		1
65533042	3/4" DR	200/8"	44	1
65533043		400/16"		1
65533044	1" DR	200/8"	54	1
65533045		400/16"		1

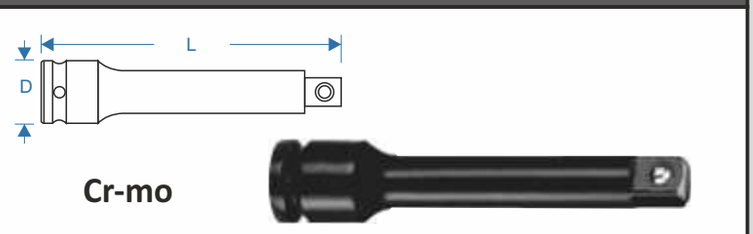

L-key bar impact GRING

Code	Square drive inch	L mm/Inch	D mm
65533046	1/2" DR	250/10"	16
65533048	3/4" DR	550/22"	24
65533047	1" DR	600/24"	32
65533049		700/28"	

Spark plug socket GRING

Code	Square drive inch	W mm	L mm/Inch	WT g
05502110	1/2"DR	16	65/2"	90
05502111		21		138

Cr-v

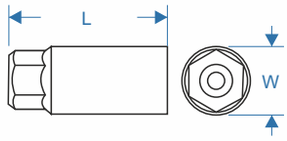

Adaptor GRING

Code	Square drive inch	L mm/Inch	WT g
05502101	1/4"F - 3/8"M	26/1"	20
05502102	3/8"F - 1/2"M	35/1"	45
05502103	1/2"F - 3/4"M	48/1"	140
05502104	3/4"F - 1"M	62/2"	390
05502105	3/4"F - 1/2"M	53,5/2"	170
05502106	1"F - 3/4"M	66/2"	430

Cr-v

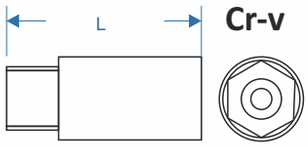

Universal joint GRING

Code	Square drive inch	L mm/Inch	WT g
05502090	1/4"DR	38,2/1"	26
05502091	3/8"DR	53/2"	60
05502092	1/2"DR	78,3/3"	154
05502093	3/4"DR	109/4"	592
05502094	1"DR	143/5"	1210

Cr-v

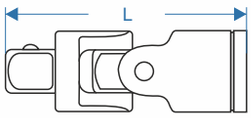

Impact universal joint GRING

Code	Square drive inch	L mm/Inch	D mm
65522003	1/2"DR	63/2"	28
65522004	3/4"DR	90/3"	44
65522005	1"DR	110/4"	54

Cr-mo

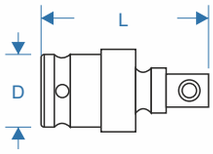

Impact adapter GRING

Code	Square drive inch	L mm/Inch	D mm	Shape
65522017	1/2"F x 3/4"M	48/1"	30	1
65522018	3/4"F x 1/2"M	56/2"	44	
65522019	3/4"F x 1"M	64/2"		
65522020	1"F x 3/4"M	75/3"	54	
65522027	1"F x 1-1/2"M	90/3"		3
65522029	1-1/2"F x 1"M	100/4"	86	
65522030	1-1/2"F x 2-1/2"M	120/4"		
65522031	2-1/2"F x 1-1/2"M	127/5"	127	

Cr-mo

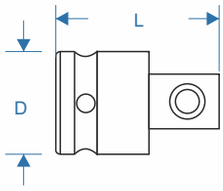

Impact adaptor set GRING

Code	Set	Pcs
65522132	1/2"F x 3/4"M	5
	3/4"F x 1/2"M	
	3/4"F x 1"M	
	1"F x 3/4"M	
	1-1/2"F x 1"M	

Cr-mo

Adaptor set GRING

Code	Set	Pcs
05502109	3/8"F x 1/4"M	5
	3/8"F x 1/2"M	
	1/2"F x 3/8"M	
	1/2"F x 3/4"M	
	3/4"F x 1/2"M	

Cr-v

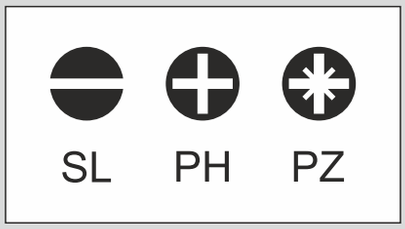

Slotted screwdriver SL GRING

Code	SL	L 1	L 2	Weight gr
43401001	3	60	82	40
43401002	4	80		45
43401003	5,5	125	103	95
43401004	6,5	150		115
43401005	8	200	123	195

Phillips screwdriver PH GRING

Code	PH	L 1	L 2	Weight gr
43401006	0	60	82	40
43401007	1	80		50
43401008	2	100	103	105
43401009	3	150	123	205

Stubby phillips GS approval screwdriver PH GRING

Code	PH	L 1	L 2	Weight gr
43401010	2	38	50	45

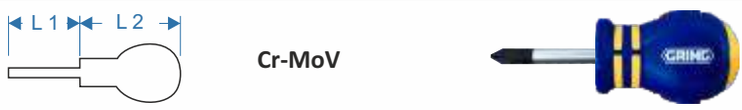

Stubby slotted GS approval screwdriver SL GRING

Code	SL	L 1	L 2	Weight gr
43401011	6,5	38	50	45

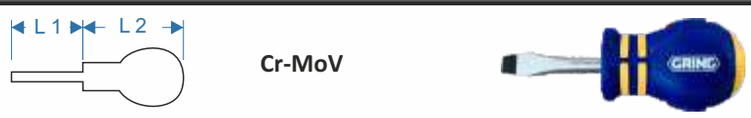

Pozi screwdriver PZ GRING

Code	PZ	L 1	L 2	Weight gr
43401012	0	60	82	40
43401013	1	80		50
43401014	2	100	103	105

Impact go thru screwdriver PH GRING

Code	PH	L 1	L 2	Weight gr
43401015	1	75	114	105
43401016	2	100	134	174
43401017	3	125	148	295

Impact go thru screwdriver SL GRING

Code	SL	L 1	L 2	Weight gr
43401018	4	75	114	96
43401019	6,5	100	134	174
43401020	8	150	148	276

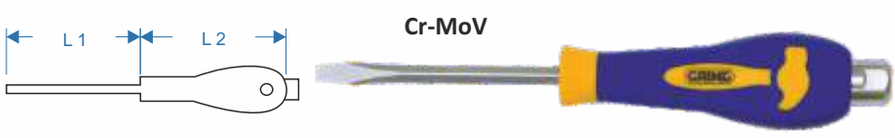

Screwdriver set SL & PH 5 pcs GRING

Code	Set	Size	Pcs
76725027	Slotted screwdrivers SL GRING	4x80; 5,5x125; 6,5x150	3
	Phillips screwdrivers PH GRING	1x80; 2x100	2

Cr-MoV

Impact go thru screwdriver set SL & PH 6 pcs GRING

Code	Set	Size	Pcs
76725032	Impact go thru screwdrivers SL GRING	4x75; 6,5x100; 8x150	3
	Impact go thru screwdrivers PH GRING	1x75; 2x100; 3x125	3

Cr-MoV

Screwdriver set SL & PH 7 pcs GRING

Code	Set	Size	Pcs
76725028	Slotted screwdrivers SL GRING	4x80; 5,5x125; 6,5x150; 8x200	4
	Phillips screwdrivers PH GRING	1x80; 2x100; 3x150	3

Cr-MoV

Screwdriver set SL & PH 14 pcs GRING

Code	Set	Size	Pcs
76725029	Slotted screwdrivers SL GRING	3x60; 4x80; 5,5x125; 6,5x150;8x200	5
	Phillips screwdrivers PH GRING	0x60; 1x80; 2x100; 3x150	4
	Stubby phillips GS approval screwdriver PH GRING	2x38	1
	Stubby slotted GS approval screwdriver SL GRING	6,5x38	1
	Pozi screwdrivers PZ GRING	0x60; 1x80; 2x100	3

Cr-MoV

Machinist hammer with wooden handle GRING

Code	L mm/Inch	WT gr
61523001	280/11"	200
61523002	300/12"	300
61523003	310/12"	400
61523004	320/13"	500
61523005	330/13"	600
61523006	340/13"	700
61523007	350/14"	800
61523008	360/14"	900
61523009	360/14"	1000
61523010	380/15"	1500
61523011	390/16"	2000

Machinist hammer with fiberglass handle GRING

Code	L mm/Inch	WT gr
61523012	280/11"	200
61523013	300/12"	300
61523014	310/12"	400
61523015	320/13"	500
61523016	330/13"	600
61523017	340/13"	700
61523018	350/14"	800
61523019	360/14"	900
61523020	360/14"	1000
61523021	380/15"	1500
61523022	390/16"	2000

Claw Hammer hammer wither fiberglass handle GRING

Code	L mm/Inch	WT gr
61523059	330/13"	450
61523069		570
61523058	400/16"	680

Stoning Hammer with wooden handle GRING

Code	L mm/Inch	WT gr
61523026	280/11"	2000
61523027	600/24"	3000
61523028	700/28"	4000
61523029	800/32"	5000
61523030		6000
61523031		7000
61523032	900/36"	8000
61523033		9000
61523034		10000

Copper hammer GRING

Code	L mm/Inch	WT gr
61523024	400/16"	800
61523025		1000

Stoning hammer with fiberglass handle GRING

Code	L mm/Inch	WT gr
61523066	280/11"	1500
61523065		2000

Two way mallet with wooden handle GRING

Code	L mm/Inch	WT gr
61523023	400/16"	360

Stoning hammer with fiberglass handle GRING

Code	L mm/Inch	WT gr
61523067	900/36"	3000
61523064		4000
61523068		5000
61523062		8000
61523061		10000

Axe with wooden handle GRING

Code	L mm/Inch	WT gr
61523035	360/14"	600
61523036	380/15"	800
61523037	430/17"	1000
61523038	900/36"	1600

Axe with fiberglass handle GRING

Code	L mm/Inch	WT gr
61523039	360/14"	600
61523040	380/15"	800
61523041	430/17"	1000
61523042	900/36"	1600

Pry bar curved, angle 30 ° GRING

Code	L mm/Inch	D mm/Inch	WT gr
61623005	900/36"	16/5/8"	1400

Scrap GRING

Code	L mm/Inch	D mm/Inch	WT gr
61623001	1200/48"	22/1"	5100
61623002	1800/72"	25/1"	7100

Pry bar curved, angle 70 ° GRING

Code	L mm/Inch	D mm/Inch	WT gr
61623006	600/24"	16/5/8"	1000

Wrecking Bar GRING

Code	L mm/Inch	WT gr
61623003	450/18"	1000
61623004	900/36"	3000

Pry bar curved, angle 90 ° GRING

Code	L mm/Inch	D mm/Inch	WT gr
61623007	600/24"	16/5/8"	1000

Pry bar GRING

Code	L mm/Inch	WT gr
61523060	500/20"	700
61523063	600/24"	1000

Pry bar direct GRING

Code	L mm/Inch	D mm/Inch	WT gr
61623008	900/36"	16/5/8"	1400

4PC Pry bar set GRING

Code	Set	D mm/Inch	L mm/Inch	Pcs
61623010	Pry bar curved, angle 30° GRING	16/5/8"	400/36	1
	Pry bar curved, angle 70° GRING		600/24	1
	Pry bar curved, angle 90° GRING		600/24	1
	Pry bar direct GRING		900/36	1

Combination pliers GRING

Code	L mm/Inch	A mm	B mm	WT gr
42201001	160mm/6"	10	25	230
42201002	180mm/7"	11	26	265
42201003	200mm/8"	12	27	360

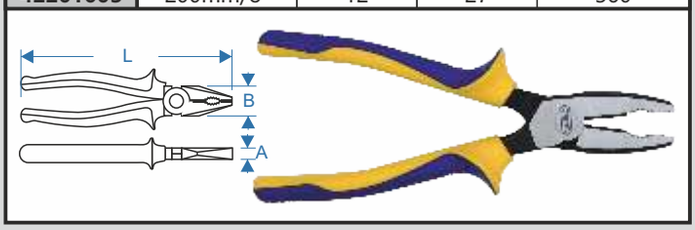

Diagonal cutting pliers GRING

Code	L mm/Inch	A mm	B mm	WT gr
42201006	160mm/6"	11	24	190
42201007	180mm/7"	12	25	255
42201008	200mm/8"	13	26	295

Long nose pliers GRING

Code	L mm/Inch	A mm	B mm	WT gr
42201004	160mm/6"	10	18	150
42201005	200mm/8"	12	20	250

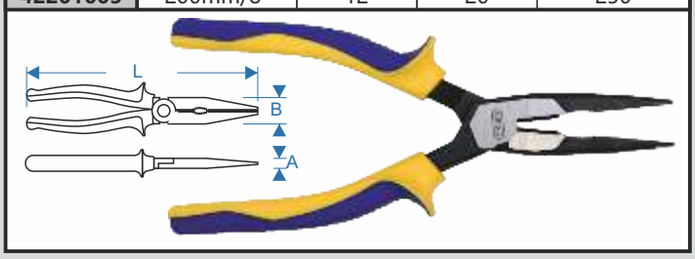

End cutting pliers GRING

Code	L mm/Inch	A mm	B mm	WT gr
42201009	160mm/6"			150

GRING/Bent nose pliers GRING

Code	L mm/Inch	A mm	B mm	WT gr
42201037	160mm/6"	10	18	150

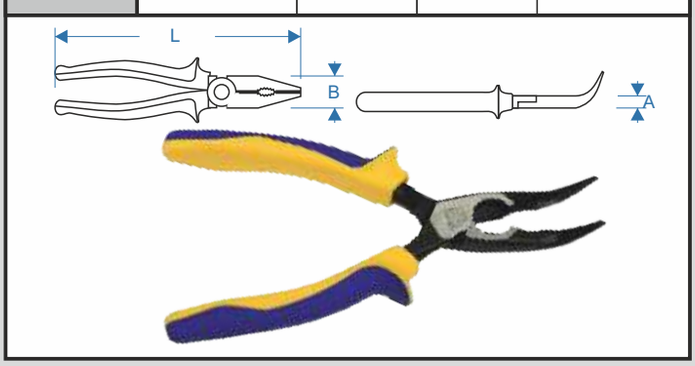

Water pump pliers GRING

Code	L mm/Inch	A mm	B mm	C mm	WT gr
42201010	250mm/10"	30	10	33	360

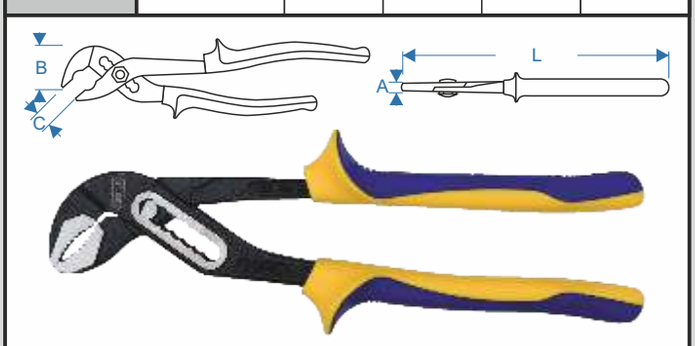

Water pump pliers GRING

Code	L mm/Inch	A mm	B mm	C mm	WT gr
42201110	400/16"			71	1320
42201111	500/20"			84	1530

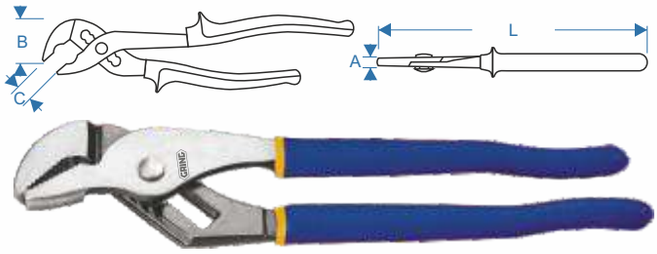

Trimming pliers GRING

Code	L mm/Inch	A mm	WT gr
42202000	350/14"		470

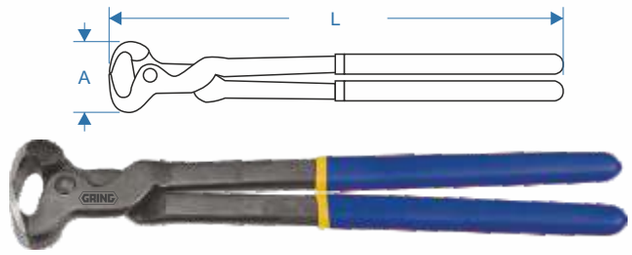

Exchangable double leverage pliers set GRING

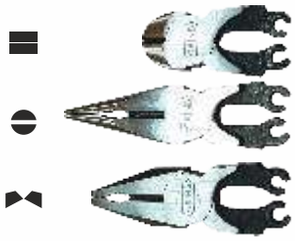

Combination pliers

Long nose pliers

Diagonal cutting pliers

Code	L mm/Inch
42201032	180/7"

Long nose pliers set 6 pcs GRING

Code	L mm/Inch	Degree	Pcs
42201034	275/11"	0°	1
	275/11"	45°	1
	275/11"	90°	1
	400/16"	0°	1
	400/16"	45°	1
	400/16"	90°	1

Pliers set 3 pcs GRING

Code	Set	Size mm/Inch	Pcs
42201052	Combination pliers Gring	160/6"	1
	Long nose pliers Gring		1
	Diagonal cutting pliers Gring		1

Pliers set 4 pcs GRING

Code	Set	Size mm/Inch	Pcs
42201053	Combination pliers Gring	160/6"	1
	Long nose pliers Gring		1
	Diagonal cutting pliers Gring		1
	Bent nose pliers Gring		1

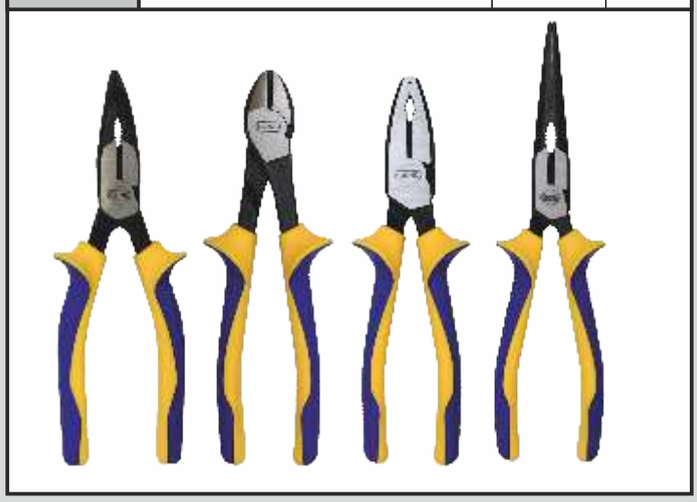

Pliers set 5 pcs GRING

Code	Set	Size mm/Inch	Pcs
42201054	Combination pliers Gring	160/6"	1
	Long nose pliers Gring		1
	Diagonal cutting pliers Gring		1
	Bent nose pliers Gring		1
	Water pump pliers Gring	250/10"	1

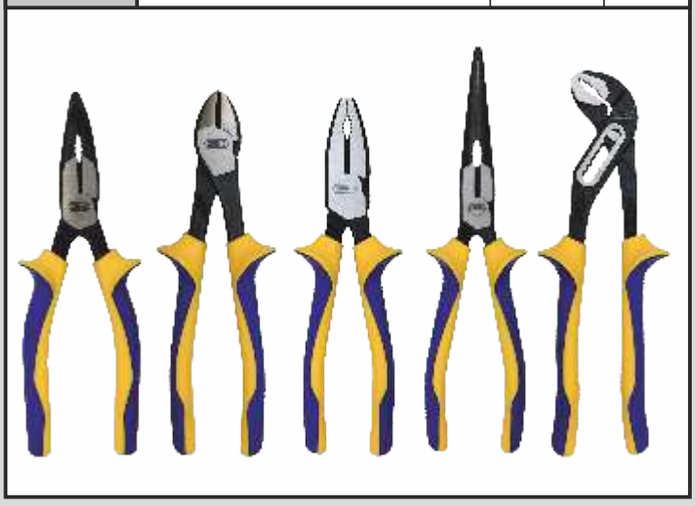

Pliers set 6 pcs GRING

Code	Set	Size mm/Inch	Pcs
42201055	Combination pliers Gring	160/6"	1
	Long nose pliers Gring		1
	Diagonal cutting pliers Gring		1
	Bent nose pliers Gring		1
	End cutting pliers Gring		1
	Water pump pliers Gring	250/10"	1

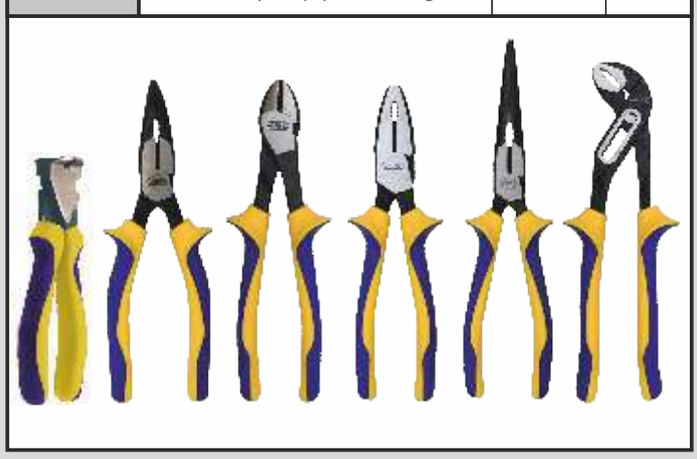

Curverd jaw locking pliers GRING

Code	L mm/Inch	A mm	WT gr
42401047	125/5"		
42401048	175/7"	23	
42401049	250/10"		

Cr-Mo

Sheet metal gripl tool GRING

Code	L mm/Inch	A mm	WT gr
42401002	250/10"	22	

Cr-Mo

Locking c-clamps with swivel pads GRING

Code	L mm/Inch	A mm	WT gr
42401108	460/18"		
42401109	610/24"		

Cr-Mo

Locking wrench GRING

Code	L mm/Inch	A mm	WT gr
42401111	460/18"		
42401112	500/20"		

Cr-Mo

Curverd jaw locking pliers GRING

Code	L mm/Inch	A mm	WT gr
42401065	150/6"		
42401058	225/9"	40	

Cr-Mo

Curverd jaw locking pliers set 5 pcs GRING

Code	Set	Size mm/Inch	Pcs
42422001	Curverd jaw locking pliers Gring	125/5" 175/7" 250/10"	1
	Curverd jaw locking pliers Gring	150/6" 225/9"	1

Cr-Mo

Aviation tin snips GRING

Code	L mm/Inch	Wing length	Cutting thickness	Tip	WT gr
42688124	250/10"	33,4/1-3/8"	1,2/1/16"	left	42
42688125				right	
42688126				straight	

English snips GRING

Code	L mm/Inch	WT gr
42202025	200/8"	
42202026	250/10"	
42202027	300/12"	
42202028	350/14"	

Europen snips GRING

Code	L mm/Inch	Tip	WT gr
42202032		left	
42202033		right	

Cable cutter GRING

Code	L mm/Inch	Diameter mm	WT gr
42688013	450/18"	22	
42688014	600/24"	26	
42688015	900/36"	50	

Bolt clipper GRING

Code	L mm/Inch	Diameter mm	WT gr
42688120	350/14"	7	18
42688018	450/18"	8	20
42688121	600/24"	10	23
42688019	900/36"	16	25

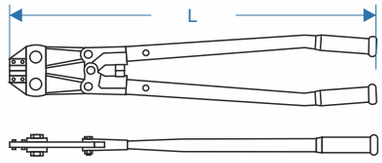

For fittng retaining ring onto shaft or into bores.
Inserting bearing steel spikes for heavy duty applications.

Non-slip spike angle enables the ring to stick firmly to the spikes when compressing or expanding.
Wide handle for better handling.

Circlip plier with a tipped tip GRING

Code	L mm/Inch
42201020	180/7"
42201021	230/9"

Circlip plier with a tipped tip GRING

Code	L mm/Inch
42201022	170/7"
42201023	215/9"

Circlip plier with a tipped tip GRING

Code	L mm/Inch
42201024	180/7"
42201025	230/9"

Circlip plier with a tipped tip GRING

Code	L mm/Inch
42201026	170/7"
42201027	215/9"

Circlip plier standard GRING

Code	L mm/Inch
42201040	180/7"
42201041	230/9"
42201042	300/12"

Circlip plier standard GRING

Code	L mm/Inch
42201043	170/7"
42201044	215/9"
42201045	300/12"

Circlip plier standard GRING

Code	L mm/Inch
42201046	180/7"
42201047	230/9"
42201048	300/12"

Circlip plier standard GRING

Code	L mm/Inch
42201049	170/7"
42201050	215/9"
42201051	300/12"

Oil filter pliers GRING

Code	C mm	L mm/Inch
42201039	57~110	170/7"

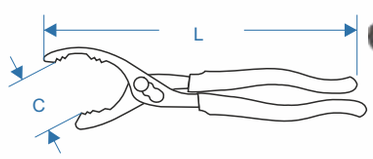

Pliers set 4 pcs GRING

Code	Set	Size	Pcs
42201056	Circlip plier Gring	180/7"	1
	Circlip plier Gring	170/7"	1
	Circlip plier Gring	180/7"	1
	Circlip plier Gring	170/7"	1

Pliers set 8 pcs GRING

Code	Set	Size	Pcs
42201057	Circlip plier Gring	180/7" 230/9"	1
	Circlip plier Gring	170/7" 215/9"	1
	Circlip plier Gring	180/7" 230/9"	1
	Circlip plier Gring	170/7" 215/9"	1

Insulated combination pliers 1000V GRING

Code	L mm/Inch
61128152	160/6"
61128153	180/7"

DIN EN 60 900

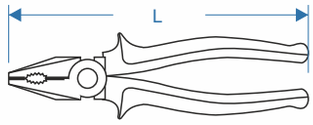

Insulated bent nose pliers 1000V GRING

Code	L mm/Inch
61128178	160/6"

DIN EN 60 900

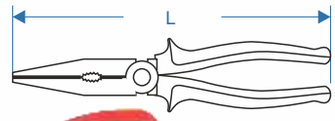

Insulated long nose Pliers 1000V GRING

Code	L mm/Inch
61128155	160/6"
61128156	200/8"

DIN EN 60 900

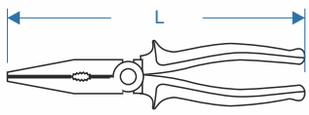

Insulated flat nose pliers 1000V GRING

Code	L mm/Inch
61128177	160/6"

DIN EN 60 900

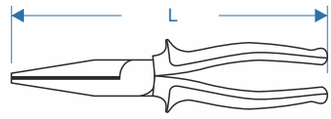

Insulated diagonal cutting pliers 1000V GRING

Code	L mm/Inch
61128157	160/6"

DIN EN 60 900

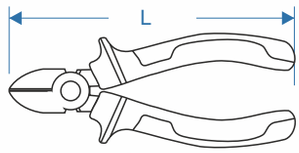

Insulated cable cutter 1000V GRING

Code	L mm/Inch
61128164	160/6"
61128165	200/8"

DIN EN 60 900

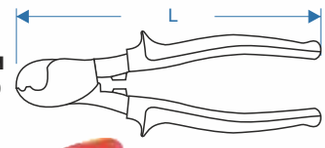

Insulated water pump pliers 1000V Gring

Code	L mm/Inch
61128158	250/10"

DIN EN 60 900

Insulated cable cutter 1000V GRING

Code	L mm/Inch
61128161	200/6"

DIN EN 60 900

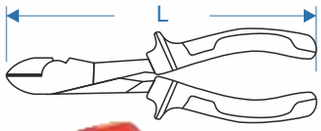

Insulated wire stripping pliers 1000V GRING

Code	L mm/Inch
61128162	160/6"

DIN EN 60 900

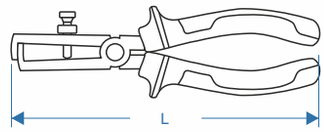

Insulated long round nose pliers 1000V Gring

Code	L mm/Inch
61128159	160/6"

DIN EN 60 900

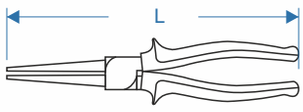

Insulated double cable cutter 1000V Gring

Code	L mm/Inch
61128163	250/10"

DIN EN 60 900

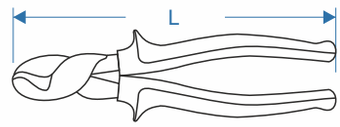

Insulated adjustable wrench 1000V GRING

Code	L mm/Inch
61128150	200/8"
61128151	250/10"

DIN EN 60 900

Insulated cable knife 1000V Gring

Code	L mm/Inch
61128125	200/8"
61128126	
61128127	
61128128	

DIN EN 60 900

61128125 61128126 61128127 61128128

Insulated scissors 1000V Gring

Code	L mm/Inch
61128122	160/6"

DIN EN 60 900

Insulated pocket wire strippers pliers GRING

Code	L mm/Inch
61128180	170/7"

DIN EN 60 900

ъDielectric tool set 3 pcs 1000V GRING

Code	Set	Size mm/Inch	Pcs
61128211	Insulated combination pliers 1000V Gring	160/6"	1
	Insulated long nose Pliers 1000V Gring		1
	Insulated diagonal cutting pliers 1000V Gring		1

DIN EN 60 900

Dielectric tool set 4 pcs 1000V GRING

Code	Set	Size mm/Inch	Pcs
61128212	Insulated combination pliers 1000V Gring	160/6"	1
	Insulated long nose Pliers 1000V Gring		1
	Insulated diagonal cutting pliers 1000V Gring		1
	Insulated bent nose pliers 1000V Gring		1

DIN EN 60 900

Dielectric tool set 5 pcs 1000V GRING

Code	Set	Size mm/Inch	Pcs
61128213	Insulated combination pliers 1000V Gring	160/6"	1
	Insulated long nose Pliers 1000V Gring		1
	Insulated diagonal cutting pliers 1000V Gring		1
	Insulated bent nose pliers 1000V Gring		1
	Insulated wire stripping pliers 1000V Gring		1

DIN EN 60 900

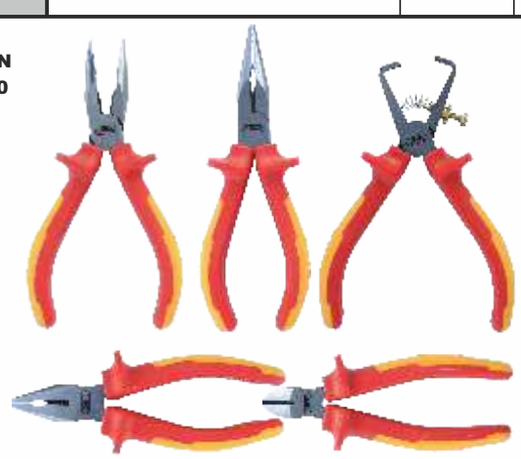

Dielectric tool set 6 pcs 1000V GRING

Code	Set	Size mm/Inch	Pcs
61128214	Insulated combination pliers 1000V Gring	160/6"	1
	Insulated long nose Pliers 1000V Gring		1
	Insulated diagonal cutting pliers 1000V Gring		1
	Insulated bent nose pliers 1000V Gring		1
	Insulated wire stripping pliers 1000V Gring		1
	Insulated cable cutter 1000V Gring		1

DIN EN 60 900

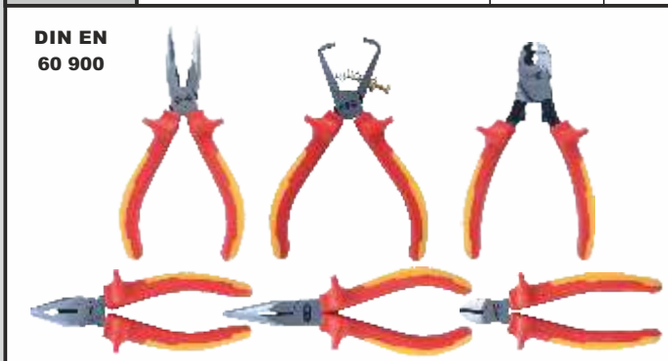

Insulated Slotted screwdriver 1000V SL GRING

Code	SL	L 1	L 2	Weight gr
61128220	2,5	75	72	30
61128221	4	100		40
61128222	5,5	125	90	90
61128223	6,5	150		108

DIN EN 60 900

Insulated phillips screwdriver 1000V PH GRING

Code	PH	L 1	L 2	Weight gr
61128224	0	60	72	30
61128225	1	80		45
61128226	2	100	90	87
61128227	3	150	118	170

DIN EN 60 900

nsulated screwdrivers set 1000V SL & PH 6 pcs GRING

Code	Set	Size	Pcs
76725030	Insulated slotted screwdrivers 1000V SL GRING	SL 2,4x75	1
		SL 4x100	1
		SL 5x125	1
		SL 5x150	1
	Insulated phillips screwdrivers 1000V PH GRING	PH 1x80	1
		PH 2x100	1

DIN EN 60 900

Insulated screwdrivers set 1000V SL & PH 8 pcs GRING

Code	Set	Size	Pcs
76725031	Insulated slotted screwdrivers 1000V SL GRING	SL 2,4x75	1
		SL 4x100	1
		SL 5x125	1
		SL 5x150	1
	Insulated phillips screwdrivers 1000V PH GRING	PH 0x60	1
		PH 1x80	1
		PH 2x100	1
		PH 3x150	1

DIN EN 60 900

Insulated open end wrench set 1000V GRING

Code	Set	Size mm	Pcs
61128242	Insulated open end wrench set 1000V GRING	7-17	7

DIN EN 60 900

Insulated open end wrench set 1000V GRING

Code	Set	Size mm	Pcs
61128233	Insulated open end wrench set 1000V GRING	7-17	7

DIN EN 60 900

Insulated tool set 7 pcs 1000V GRING

Code	Set	Size	Pcs
61128207	Insulated diagonal cutting pliers Gring	L 160 mm/ 6"	1
	Insulated long nose pliers Gring		1
	Insulated long nose pliers Gring		1
	Insulated screwdriver Gring	SL 0x60;	1
		1x80 mm.	1
		PH 3x100;	1
		4x100 mm	1

DIN EN 60 900

Insulated tool set 9 pcs 1000V GRING

Code	Set	Size	Pcs
76725009	Insulated diagonal cutting pliers Gring	L 160 mm/ 6"	1
	Insulated long nose pliers Gring		1
	Insulated long nose pliers Gring		1
	Insulated screwdriver Gring	SL 0x60; 1x80 mm. PH 3x100; 4x100 mm	4
	Insulated pocket wire strippers Gring		1
	Screwdriver probe voltage tester Gring		1

DIN EN 60 900

Insulation socket 1000V sets 18 pcs GRING

Code	Set	Size mm	Pcs
61128206	1/4" DR. Insulated ratchets Gring		1
	1/4" DR. Insulated T-Handle Gring		1
	1/4" DR. Insulated extensions Gring	100, 150	2
	1/4" DR. Insulated sockets Gring	5, 6, 7, 8, 9, 10, 11, 12, 13, 14	10
	11/4" DR. Insulated hex bits sockets Gring	3, 4, 5, 6	4

DIN EN 60 900

Insulation socket 1000V sets 16 pcs GRING

Code	Set	Size mm	Pcs
61128208	3/8" DR. Insulated ratchets Gring		1
	3/8" DR. Insulated T-Handle Gring		1
	3/8" DR. Insulated extensions Gring	100, 150	2
	3/8" DR. Insulated sockets Gring	8, 10, 12, 13, 14, 17, 19, 22	8
	3/8" DR. Insulated hex bits sockets Gring	4, 5, 6, 8	4

DIN EN 60 900

Insulation socket 1000V sets 20 pcs GRING

Code	Set	Size	Pcs
61128209	1/2" DR. Insulated ratchets Gring		1
	1/2" DR. Insulated T-Handle Gring		1
	1/2" DR. Insulated extensions Gring	125, 250 mm	2
	1/2" DR. Insulated sockets Gring	10, 11, 12, 13, 14, 17, 19, 22, 24, 27, 32 mm	11
	1/2" DR. Insulated hex bits sockets Gring	4, 5, 6, 8, 10 mm	5

DIN EN 60 900

Blade

Bi-metal saw blade GRING

Code	Teeth	L mm/inch
42688006	24TPI	300/12"
42688007	32TPI	

Alloyed M42 high speed steel with 8% Co and high-temperature endurable spring steel with vacuum electron-beam welding technology.
Features: Easy cutting stainless steel and mold steel. The service life is over 100 times as long as ordinary carbon steel blades.

Code	Teeth	L mm/inch
42688008	24TPI	300/12"
42688009	32TPI	

Alloyed M2 high speed steel and high-temperature endurable spring steel with vacuum electron- beam welding technology.
Features: Extremely sharp saw teeth. Easy cutting stainless steel and mold steel. Unbreakable in cutting with long service life.

Hand truck

Hand truck GRING

Code	Model	Capacity	L mm/inch	H mm/inch	W mm/inch	D mm/inch
61342026	AS7B	350 kg/ 800 LBS	1400/ 56"	1550/ 62"	300/12"	250/10"
61342028	AS7A		1075/ 43"	1300/ 52"		

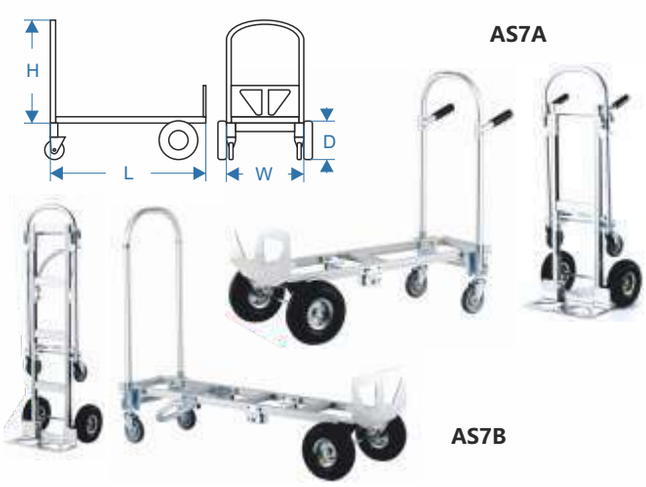

Weel Gring

Code	Type	Capacity	D mm/inch
61342227	camera wheel	350 kg/ 800 LBS	250/10"
61342228	tubeless rubber wheel		

61342227

61342228

1/2" & 1/4" DR Socket set & tool sets 90 pcs GRING				
Code	***Set***	***Size***		***Pcs***
76725003	Sockets GRING 1/2" DR 6-PT	8, 9, 10, 11, 12, 13, 14, 15, 16, 17, 18, 19, 21, 22, 24, 27, 30, 32 mm		18
	Sockets GRING 1/4" DR 6-PT	4, 4,5, 5, 5,5, 6, 7, 8, 9, 10, 11, 12, 13, 14 mm		13
	T-bar head 1/2" DR GRING	L 58/2"		1
	T-bar head 1/4" DR GRING	L 48/1"		1
	Heavy duty spinner handle 1/4" DR GRING	L 100/4"		1
	Flexibe bar 1/4" DR GRING	L 150/6"		1
	Extention bar 1/2" DR GRING	L 75/3", L 250/10"		2
	1/4" DR Extention bar GRING	L 50/2", L 100/4"		2
	Universal joint 1/2" DR GRING	L 78,3/3"		1
	Universal joint 1/4" DR GRING	L 38,2/1"		1
	Ratchet handle 1/2" DR GRING	L 200/8"		1
	Ratchet handle 1/4" DR GRING	L 125/5"		1
	Spark plug socket 1/2"DR GRING	16, 21 mm		2
	Combination wrench GRING	6, 8, 10, 12, 13, 14, 15, 17, 19 mm		9
	Combination pliers GRING	L 160/6"		1
	Hammer GRING	300 gr		1
	1/4" DR bit holder GRING			1
	Center punch GRING	5x11x140		1
	Chisel GRING	13x10x152		1
	Bits GRING: 1/4"- 25 mm	HEX	1,5; 2; 2,5; 3; 4; 5; 5,5; 6; 7; 8	10
		TORX	T8, T9, T10, T15, T20, T25, T27, T30, T35, T40	10
		PH	0, 1, 2, 3	4
		PZ	1, 2, 3	3
		FLAT	3, 4, 5, 6	4

1/2" & 1/4"DR Socket set & accessories 126 pcs GRING				
Code	**Set**	**Size**		**Pcs**
76725004	Sockets GRING 1/2" DR 6-PT	8, 9, 10, 11, 12, 13, 14, 15, 16, 17, 18, 19, 21, 22, 24, 27, 30, 32 mm		18
	Sockets GRING 1/4" DR 6-PT	4, 4,5, 5, 5,5, 6, 7, 8, 9, 10, 11, 12, 13, 14 mm		13
	T-bar head 1/2" DR GRING	L 58/2"		1
	T-bar head 1/4" DR GRING	L 48/1"		1
	1/4" DR Socket deep 6PT GRING	6, 7, 8, 9, 10, 11, 12, 13, 14 mm		9
	E-Socket GRING 1/4"	E4, E5, E6, E7, E8		5
	1/2" DR E-Soket GRING	E10, E12, E14, E16, E18, E20, E24		7
	Heavy duty spinner handle 1/4" DR GRING	L 100/4"		1
	Flexibe bar 1/4"DR GRING	L 100/4"		1
	Extention bar 1/2" DR GRING	L 75/3", L 250/10"		2
	1/4" DR Extention bar GRING	L 50/2", L 75/3"		2
	Universal joint 1/2" DR GRING	L 78,3/3"		1
	Universal joint 1/4" DR GRING	L 38,2/1"		1
	Ratchet handle 1/2" DR GRING	L 200/8"		1
	Ratchet handle 1/4" DR GRING	L 125/5"		1
	Spark plug socket 1/2"DR GRING	16, 21 mm		2
	Combination wrench GRING	6, 8, 10, 12, 13, 14, 15, 17, 19 mm		9
	Flare nut wrench GRING:	8x10, 10x11, 12x13 mm		3
	Bits GRING: 1/4"- 25 mm	HEX	1,5; 2; 2,5; 3; 4; 5; 5,5; 6; 7; 8	10
		TORX	T8, T9, T10, T15, T20, T25, T27, T30, T35, T40	10
		PH	0, 1, 2, 3	4
		PZ	1, 2, 3	3
		FLAT	3, 4, 5, 6	4
	Bits GRING: 30x10 mm	HEX	7, 8, 10, 12, 14	5
		TORX	T40, T45, T50, T55, T60	5
		PH	3, 4	2
		PZ	3, 4	2
		FLAT	8, 10, 12	3

1/2" DR Socket set & accessories 24 pcs GRING			
Code	**Set**	**Size**	**Pcs**
76725005	Sockets 1/2" DR 6-PT GRING	8, 9, 10, 11, 12, 13, 14, 15, 16, 17, 18, 19, 21, 22, 24, 27, 30, 32 mm	18
	T-bar head 1/2" DR GRING	L 58/2"	1
	Extention bar 1/2" DR GRING	L 250/10", L 75/3"	2
	Universal joint 1/2"DR GRING	L 78/3"	1
	Flexibe T-Handle 1/2"DR GRING	L 400/16"	1
	Ratchet handle 1/2" DR GRING	L 200/8"	1

Set of insulated tools up to 1000V 9 pcs GRING			
Code	**Set**	**Size**	**Pcs**
76725009	Insulated slotted screwdriver 1000V	SL 4x100 mm, Sl3x75 mm	2
	Insulated fhillips screwdriver 1000V	PH 0x75 mm, PH2x100 mm	2
	Insulated pocket wire strippers pliers 1000V	L 160/6"	1
	Screwdriver probe voltag tester 110-250V	L 140/5"	1
	Insulated combination pliers 1000V	L 160/6"	1
	Insulated long nose pliers 1000V	L 160/6"	1
	Insulated diagonal cutting pliers 1000V	L 160/6"	1

1/2" & 1/4" DR Socket set & accessories 109 pcs GRING				
Code	**Set**	**Size**		**Pcs**
76725006	Sockets 1/2" DR 6-PT GRING	8, 9, 10, 11, 12, 13, 14, 15, 16, 17, 18, 19, 20, 21, 22, 23, 24, 25, 27, 30, 32 mm		21
	Sockets Gring 1/4" DR 6-PT	4, 4,5, 5, 5,5, 6, 7, 8, 9, 10, 11, 12, 13, 14 mm		13
	1/4" DR Sockets deep 6-PT GRING	6, 7, 8, 9, 10, 11, 12, 13, 14 mm		9
	1/2" DR Deep sockets 6-PT GRING	14, 15, 17, 19, 22 mm		5
	E-Sockets 1/4" DR GRING	E-4, E-5, E-6, E-7, E-8		5
	E-Sockets 1/2" DR GRING	E-10, E-12, E-14, E-16, E-18, E-20, E-24		7
	Universal joint 1/2" DR GRING	L 78,3/3"		1
	Universal joint 1/4" DR GRING	L 38,2/1"		1
	1/4" DR Heavy duty spinner handle GRING	L 100/4"		1
	T-bar head 1/2" DR GRING	L 58/2"		1
	1/4" DR Sliding t-bar GRING	L 100/4"		1
	1/4" DR Extension bar GRING	L 50/2"		1
	1/2" DR Extensions bar GRING	L 125/5", L 250/10"		2
	1/4" DR Flexibl bar GRING	L 100/4"		1
	1/2" DR Ratchet handle GRING	L 200/8"		1
	1/4" DR Ratchet handle GRING	L 125/5"		1
	1/2" DR Spark plug sockets GRING	16, 26 mm		2
	Bits GRING: 30x10 mm	HEX	7, 8, 10, 12, 14	5
		TORX	T40, T45, T50, T55, T60	5
		PH	3, 4	2
		PZ	3, 4	2
		SL	6, 8, 10, 12	4
	Socket bits 1/4"DR	HEX	3, 4, 5, 6,	7
		TORX	T8, T10, T15, T20, T25, T27, T30	2
		PH	1, 2	2
		PZ	1, 2	4
		SL	4, 5,5, 6,5	3

1/2" & 1/4"DR Socket set & accessories 93 pcs GRING				
Code	**Set**	**Size**		**Pcs**
76725007	Sockets 1/2" DR 6-PT GRING	8, 9, 10, 11, 12, 13, 14, 15, 16, 17, 18, 19, 20, 21, 22, 23, 24, 27, 30, 32 mm		20
	Sockets GRING 1/4" DR 6-PT	4, 4,5, 5, 5,5, 6, 7, 8, 9, 10, 11, 12, 13, 14 mm		13
	Combination pliers GRING	L 160/6"		1
	Diagonal cutting pliers GRING	L 160/6"		1
	Combination wrench GRING	6, 8, 10, 12, 13, 14, 15, 17, 19 mm		9
	Universal joint 1/2" DR GRING	L 78,3/3"		1
	Universal joint 1/4" DR GRING	L 38,2/1"		1
	Heavy duty spinner handle 1/4" DR GRING	L 100/4"		1
	T-bar head 1/2" DR GRING	L 58/2"		1
	Extention bar 1/4" DR GRING	L 50/2"		1
	Extention bar 1/2" DR GRING	L 250/10", 125/5"		2
	Flexibe bar 1/4" DR GRING	L 100/4"		1
	Ratchet handle 1/2" DR GRING	L 200/8"		1
	Ratchet handle 1/4" DR GRING	L 125/5"		1
	Bit holder 1/2" DR GRING	10 mm		1
	Bits GRING: 30x10 mm	HEX	6, 7, 8, 10, 12, 14, 16, 17	8
		TORX	T40, T45, T50, T55, T60	5
		PH	3, 4	2
		PZ	3, 4	2
		FLAT	8, 10, 12	3
	Socket bits 1/4"DR	HEX	3, 4, 5, 6	4
		TORX	T8, T10, T15, T20, T25, T27, T30	7
		PH	1, 2	2
		PZ	1, 2	2
		SL	4, 5,5, 6,5	3

3/8" DR Socket set & accessories 23 pcs GRING

Code	Set	Size	Pcs
76725010	Sockets GRING 3/8" DR 12-PT	6, 7, 8, 9, 10, 11, 12, 13, 14, 15, 16, 17, 18, 19, 20, 21, 22, 24 mm	18
	Universal joint 3/8" DR GRING	L 53/2"	1
	T-bar head 3/8" DR GRING	L 50/2"	1
	3/8"DR Extention bar GRING	L 250/10", 75/3"	2
	Ratchet handle 3/8" DR GRING	L 200/8"	1

1/4"DR Socket set & accessories 58 pcs GRING

Code	Set	Size		Pcs
76725011	1/4" DR E-Sokets GRING	E4, E5, E6, E7, E8, E10		6
	Sockets deep GRING 1/4" DR 6-PT	6, 7, 8, 9, 10, 11, 12, 13, 14 mm		9
	Sockets 1/4" DR 6PT GRING	4, 4,5, 5, 5,5, 6, 7, 8, 9, 10, 11, 12, 13, 14 mm		13
	T-bar head 1/4" DR GRING	L 48/1"		1
	1/4" DR Heavy duty spinner handle GRING	L 100/4"		1
	Universal joint 1/4" DR GRING	L 38,2/1"		1
	1/4" DR Extention bar GRING	L 50/2", L 100/4", L 150/6"		3
	1/4" DR Flexibe bar GRING	L 100/4"		1
	1/4" DR Ratchet handle GRING	L 125/5"		1
	Palm ratchet 1/4" DR GRING			1
	1/4" DR Bit holder GRING	10 mm		1
	Adjustable wrench GRING	L 100/4"		1
	Adaptor for sockets 1/4" DR GRING			1
	1/4" DR Bits GRING	HEX	3, 4, 5, 6	4
		TORX	T10, T15, T20, T25, E27, T30, T40	7
		PH	1, 2, 3	3
		FLAT	3, 4, 5, 6	4

1/2" & 1/4"DR Socket set & tool sets 145 pcs GRING

1/2" & 1/4"DR Socket set & tool sets 145 pcs GRING				
Code	**Set**	**Size**		**Pcs**
76725008	1/2" DR Combination wrench GRING	4, 5, 6, 7, 8, 9, 10, 11, 12, 13, 14, 15, 16, 17, 18, 19, 21, 24, 27, 32 mm		20
	Sockets 1/2" DR 6-PT GRING	8, 9, 10, 11, 12, 13, 14, 15, 16, 17, 18, 19, 21, 22, 24, 25, 26, 27, 30, 32 mm		20
	1/2" DR E-Soket GRING	E10, E12, E14, E16, E18, E20		6
	1/4" DR E-Sokets GRING	E4, E5, E6, E7, E8, E10		6
	Extention bar 1/2" DR GRING	L 125/5", L 250/10"		2
	1/4" DR Extention bar GRING	L 50/2", L 150/6", L 250/10"		3
	1/4" DR Socket 6PT GRING	4, 4,5, 5, 5,5, 6, 7, 8, 9, 10, 11, 12, 13, 14 mm		13
	Sockets deep GRING 1/4" DR 6-PT	6, 7, 8, 9, 10, 11, 12, 13, 14 mm		9
	T-bar head 1/2" DR GRING	L 58/2"		1
	1/4" DR Heavy duty spinner handle GRING	L 100/4"		1
	Adaptor for sockets 1/2" DR GRING			1
	Adaptor for sockets 1/4" DR GRING			1
	Ratchet handle 1/2" DR GRING	L 200/8"		1
	Ratchet handle 1/4" DR GRING	L 125/5"		1
	Palm ratchet 1/4" DR GRING			1
	Diagonal cutting pliers GRING	L 160/6"		1
	1/2" DR Bit holder GRING	10 mm		1
	1/2" DR Flexibe T-Handle GRING	L 380/15"		1
	Universal joint 1/2" DR GRING	L 78,3/3"		1
	Universal joint 1/4" DR GRING	L 38,2/1"		1
	Long nose pliers GRING	L 160/6"		1
	Combination pliers GRING	L 160/6"		1
	1/2" DR Spark plug sockets GRING	16, 21 mm		2
	Go-through phillips screwdriver PH GRING	1x75, 2x100 mm		2
	Go-through slotted screwdriver SL GRING	5x100, 6x100 mm		2
	Hammer with wooden handle GRING	300 gr		1
	Curverd jaw locking pliers GRING	L 250/10"		1
	Adaptor F 1/4"xM 1/2" GRING	L 45/1"		1
	Bits GRING: 30x10 mm	HEX	6, 8, 10, 12, 14, 16, 17	7
		TORX	T20, T25, T30, T40, T45, T50, T55, T60	8
		PH	2, 3, 4	3
		FLAT	8, 10, 12, 14	4
		PZ	2, 3, 4	3
	Socket bits 1/4" DR GRING	HEX	3, 4, 5, 6	4
		TORX	T10, T15, T20, T25, T27, T30, T40	7
		PH	1, 2 ,3	3
		FLAT	3, 4, 5,5, 6,5	4

1/2", 3/8" & 1/4" DR Socket set & tool sets 166 pcs GRING

1/2", 3/8" & 1/4" DR Socket set & tool sets 166 pcs GRING				
Code	**Set**	**Size**		**Pcs**
76725012	Sockets GRING 1/2" DR 6-PT	8, 9, 10, 11, 12, 13, 14, 15, 16, 17, 18, 19, 20, 21, 22, 23, 24, 25, 26, 27, 28, 29, 30, 32 mm		24
	Sockets 1/4" DR 6PT GRING	4, 4,5, 5, 5,5, 6, 7, 8, 9, 10, 11, 12, 13, 14 mm		13
	3/8" DR 6 PT E-Sokets GRING	6, 7, 8, 9, 10, 11, 12, 13, 14, 15, 16, 17, 18, 19, 20, 21, 22, 24 mm		18
	T-bar head GRING	1/2" DR, 3/8 DR		2
	1/4" DR Heavy duty spinner handle GRING	L 100/4"		1
	Combination pliers GRING	L 160/6"		1
	Diagonal cutting pliers GRING	L 160/6"		1
	Flare nut wrench GRING	8x10, 10x11, 12x13, 14x17		4
	Combination wrenchs GRING	6, 7, 8, 9, 10, 11, 12, 13, 14, 15, 16, 17, 19, 21, 24 mm		15
	Universal joint 1/2" DR GRING	L 78,3/3"		1
	Universal joint 1/4" DR GRING	L 38,2/1"		1
	Universal joint 3/8" DR GRING	L 53/2"		1
	3/8" DR Extention bar GRING	L 75/3", L 150/6"		2
	1/2" DR Extention bar GRING	L 125/5", L 250/10"		2
	1/4" DR Extention bar GRING	L 50/2", L 100/4", L 150/6"		3
	1/4"DR Ratchet handle GRING	L 125/5"		1
	Ratchet handle 1/2" DR GRING	L 200/8"		1
	Ratchet handle 1/4" DR GRING	L 125/5"		1
	1/2" DR Bit holder GRING	10 /mm		1
	1/2"DR Flexibe T-Handle GRING	L 380/15"		1
	1/2" DR Spark plug socket GRING	16, 21 mm		2
	Go-through phillips screwdriver PH GRING	1x75mm, 2x100 mm		2
	Go-through slotted screwdriver SL GRING	5x100mm, 6x100 mm		2
	Hammer with wooden handle GRING	300 gr		1
	Curverd jaw locking pliers GRING	L 175/7"		1
	1/4" DR Bit holder GRING	10 mm		1
	Adaptors F 1/4"xM 3/8" GRING	L 26/1"		1
	Adaptors F 3/8"xM 1/4" GRING	L 30/1"		1
	Adaptors F 3/8"xM 1/2" GRING	L 35/1"		1
	Adaptors F 1/2"xM 3/8" GRING	L 45/1"		1
	Bits 30x10 mm GRING	HEX	6, 7, 8, 10, 12, 14, 16, 17	8
		TORX	T30, T40, T45, T50, T55, T60	6
		PH	2, 3, 4	3
		PZ	3, 4	2
		FLAT	8, 10, 12, 14	4
		TORX with hole	T30, T40, T45, T50, T55	4
	1/4" DR Bits GRING	HEX	2, 3, 4, 5, 6, 7, 8, 9, 10, 12	10
		TORX	T10, T15, T20, T25, T27, T30, T35, T40, T45, T50	10
		PH	0, 1, 2, 3	4
		PZ	1, 2, 3	3
		FLAT	3, 4, 5, 6	4

Socket wrenches 8 pcs GRING			
Code	**Set**	**Size**	**Pcs**
76725015	Socket wrenches GRING	8, 10, 11, 12, 13, 14, 15, 16 mm	8

Socket wrenches 19 pcs GRING			
Code	**Set**	**Size**	**Pcs**
76725016	Socket wrenches GRING	8, 10,11, 12, 13, 14, 15, 16, 17, 18, 19 mm	11
	Double flexible sockets wrench GRING	6x7, 8x9, 10x11, 12x13, 14x15, 16x17, 18x19, 21x22 mm	8

Socket swivel wrench set 7 pcs GRING			
Code	**Set**	**Size**	**Pcs**
76725017	Double flexible socket wrenchs GRING	6x7, 8x9, 10x11, 12x13, 14x15, 16x17, 18x19 mm	7

Socket wrenches 9 pcs GRING			
Code	**Set**	**Size**	**Pcs**
76725018	Rod for straight end wrench GRING		1
	Socket wrenches GRING:	6x7, 8x9, 10x11, 12x13, 14x15, 16x17, 18x19, 21x22 mm	8

Wrench set 21 pcs (flare nut, at an angle of 75 °, carob, socket) GRING			
Code	**Set**	**Size**	**Pcs**
76725019	Socket wrenches GRING	6x7, 8x9, 10x11, 12x13, 14x15, 16x17, 18x19 mm	7
	Rod for straight end wrench GRING		1
	Box end offset wrenchs 75° GRING	6x7, 8x9, 10x11, 12x13, 14x15, 16x17, 18x19, 21x22 mm	8
	Flare nut wrenchs GRING	8x10, 9x11, 12x13, 14x15, 17x19 mm	5

Flat cold chisel, pin, taper panch set 16 pcs GRING			
Code	**Set**	**Size**	**Pcs**
76725037	Chisel flats GRING	25x18x200, 16x12,7x165, 13x10x152, 6x6x121 mm	4
	Center punchs GRING	5x11x140, 9,5x19x200, 8x16x178 mm	3
	Long taper punchs GRING	4x12; 5x12; 7x216; 7x228; 3x10x200 mm	5
	Pin punchs GRING	8x12; 7x178; 2,5x8x120; 4x8x133 mm	4

Bit set 50 pcs GRING			
Code	**Set**	**Size**	**Pcs**
76725021	Bits 6-PT long GRING	4, 5, 6, 7, 8, 9, 10, 11, 12, 13, 14 mm	11
	Bits 6-PT short GRING	4, 5, 6, 7, 8, 9, 10, 11, 12, 13, 14 mm	11
	Bits 12-PT 75 L long GRING	5, 6, 8, 10, 12 mm	5
	Bits 12-PT 30 L short GRING	5, 6, 8, 10, 12 mm	5
	TORX long GRING	T20, T25, T27, T30, T40, T45, T50, T55	8
	TORX short GRING:	T20, T25, T27, T30, T40, T45, T50, T55	8
	Adaptors 3/8" DR GRING		1
	Adaptors 1/2" DR GRING		1

Bit set 17 pcs 1/2" DR GRING			
Code	**Set**	**Size**	**Pcs**
76725022	1/2" DR HEX Impact drivers GRING	4, 6, 8, 10, 12, 14, 16, 17, 19 mm	9
	1/2" DR TORX Impact drivers GRING	T20, T30, T40, T50, T55, T60, T70, T80	8

Cobalt drills for metal

Matter fabricated of the particular drilling rig is the fastest-moving one still HSS-Co 8%. The basic alloying principle method produced from cobalt improves its quality.
Fastest-moving drilling rigs alloyed by cobalt are qualified enough to carry mechanic and thermal loadings, what makes it possible to apply them for drilling hard-processed materials without prior use of forced cooling.
Standard edge of crusher with cobalt drill rig, shaped with cutting hem bumps, composes 135 °.

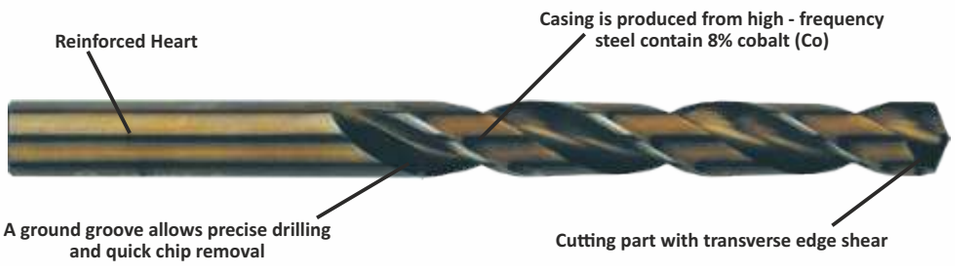

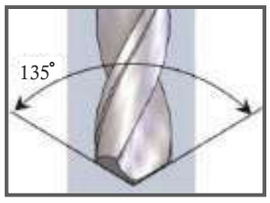

Drill bit set cobalt GRING

Code	*Set*	*Size*	*Pcs*
76725025	HSS Co Drill bits set 1-13 mm GRING (mm):	1,0 (2pcs), 1,5 (2pcs), 2,0 (2pcs), 2,5 (2pcs), 3,0 (2pcs), 3,2 (2pcs), 3,5 (2pcs), 4,0 (2pcs), 4,2 (2pcs), 4,5 (2pcs), 5,0 (1pcs), 5,5 (1pcs), 6,0 (1pcs), 6,5 (1pcs), 7,0 (1pcs), 8,0 (1pcs), 9,0 (1pcs), 10,0 (1pcs), 11,0 (1pcs), 12,0 (1pcs), 13,0 (1pcs)	31
76725026	HSS Co Drill bits set 1-10 mm GRING (mm):	1,0 (2pcs), 1,5 (2pcs), 2,0 (2pcs), 2,5 (2pcs), 3,0 (2pcs), 3,2 (2pcs), 3,5 (2pcs), 4,0 (2pcs), 4,2 (2pcs), 4,5 (2pcs), 5,0 (1pcs), 6,0 (1pcs), 7,0 (1pcs), 8,0 (1pcs), 9,0 (1pcs), 10,0 (1pcs)	26

Drill bit set HSS PRO GRING

Code	*Set*	*Size*	*Pcs*
76725023	HSS PRO DIN Drill bits 1-13 mm GRING (mm)	1,0 (2pcs), 1,5 (2pcs), 2,0 (2pcs), 2,5 (2pcs), 3,0 (2pcs), 3,2 (2pcs), 3,5 (2pcs), 4,0 (2pcs), 4,2 (2pcs), 4,5 (2pcs), 5,0 (1pcs), 5,5 (1pcs), 6,0 (1pcs), 6,5 (1pcs), 7,0 (1pcs), 8,0 (1pcs), 9,0 (1pcs), 10,0 (1pcs), 11,0 (1pcs), 12,0 (1pcs), 13,0 (1pcs)	31
76725024	HSS PRO DIN Drill bits 1-10 mm GRING (mm):	1,0 (2pcs), 1,5 (2pcs), 2,0 (2pcs), 2,5 (2pcs), 3,0 (2pcs), 3,2 (2pcs), 3,5 (2pcs), 4,0 (2pcs), 4,2 (2pcs), 4,5 (2pcs), 5,0 (1pcs), 6,0 (1pcs), 7,0 (1pcs), 8,0 (1pcs), 9,0 (1pcs), 10,0 (1pcs)	26

3/4" DR impact socket set 16 pcs GRING

Code	Set	Size	Pcs
76728038	3/4"DR Impact socket GRING	17, 19, 21, 22, 24, 27, 30, 32, 36, 41, 46, 50 mm	12
	3/4"DR. Sliding T-bar GRING	L 600/6"	1
	3/4"DR. Rachet handle GRING	L 600/6"	1
	3/4"DR. Extension bar GRING	L 200/8", 300/12"	2

3/4" DR impact socket set 16 pcs GRING

Code	Set	Size	Pcs
76728059	3/4" DR Impact socket GRING	7/8", 15/16", 1", 1-1\16", 1-1\8", 1-1\4", 1-3\8",1-7\16", 1-1\2", 1-5\8", 1-3\4", 1-7/8"	12
	3/4" DR. Sliding T-bar GRING	L 600/6"	1
	3/4"DR. Rachet handle GRING	L 600/6"	1
	3/4" DR. Extension bar GRING	L 200/8", 300/12"	2

3/4" DR impact socket set 23 pcs GRING

Code	Set	Size	Pcs
76728039	3/4"DR Impact socket GRING	17, 19, 21, 22, 24, 27, 30, 32, 33, 34, 35, 36, 38, 41, 46, 50, 55, 60, 65 mm	19
	3/4"DR. Sliding T-bar GRING	L 600/6"	1
	3/4"DR. Rachet handle GRING	L 600/6"	1
	3/4"DR. Extension bar GRING	L 200/8", 300/12"	2

3/4" DR impact socket set 23 pcs GRING

Code	Set	Size	Pcs
76728060	3/4" DR Impact socket GRING	3/4", 7/8", 15/16", 1", 1-1/16", 1-1/8", 1-3/16", 1-1/4", 1-5/16", 1-3/8", 1-7/16", 1-1/2", 1-9/16", 1-5/8", 1-11/16", 1-3/4", 1-13/16", 1-7/8", 2"	19
	3/4" DR. Sliding T-bar GRING	L 600/6"	1
	3/4"DR. Rachet handle GRING	L 600/6"	1
	3/4" DR. Extension bar GRING	L 200/8", 300/12"	2

1" DR impact socket set 20 pcs GRING

Code	Set	Size	Pcs
76728040	1" DR Impact socket GRING	27, 30, 32, 33, 35, 36, 38, 41, 46, 50, 55, 60, 65, 70, 75, 80	16
	1" DR. Sliding T-bar GRING	L 600/6"	1
	1"DR. Rachet GRING	L 600/6"	1
	1" DR. Extension bar GRING	L 200/8", 300/12"	2

1" DR impact socket set 20 pcs GRING

Code	Set	Size	Pcs
76728041	1" DR Impact socket GRING	1-5/8", 1-11/16", 1-3/4", 1-13/16",1-7/8", 2", 2-1/8", 2-3/16", 2-1/4", 2-3/8", 2-1/2", 2-5/8",2-3/4", 2-15/16", 3", 3-1/8"	16
	1" DR. Sliding T-bar GRING	L 600/6"	1
	1"DR. Rachet GRING	L 600/6"	1
	1" DR. Extension bar GRING	L 200/8", 450/18"	2

Gear puller 2-arm GRING

Code	A max/mm	B max/mm	L mm	L 1 mm	E mm	T max
42654001	90	70-130	100	M 14x 1.5x130	3	4.5
42654002	130	80-180				
42654003	160	105-220	150	M 20x 2x210	4.5	6.5
42654004	200	120-270				
42654005	250	160-330	205	M 27x 2x280	6.2	8.5
42654006	350	160-420				
42654007	520	195-600				

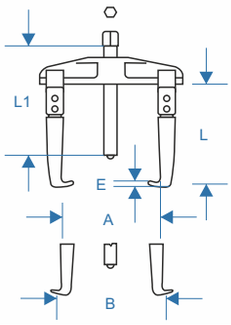

Gear puller 3-arm GRING

Code	A max/mm	B max/mm	L mm	L 1 mm	E mm	T max
42655006	90	70-130	100	M 14x 1.5x130	3	5.5
42655007	130	80-180				
42655008	160	105-220	150	M 20x 2x210	4.5	7
42655009	200	120-270				
42655010	250	160-330	205	M 27x 2x280	6.2	9
42655011	350	160-420				
42655012	520	195-600				

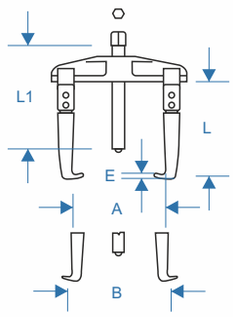

Gear puller 2-arm GRING

Code	A max/mm	B max/mm	L mm
42655014	25-130	80-180	100x200x250

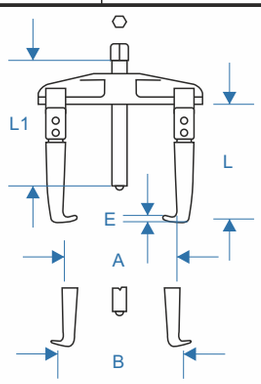

Gear puller 3-arm GRING

Code	A max/mm	B max/mm	L mm
42655013	25-130	80-180	100x200x250

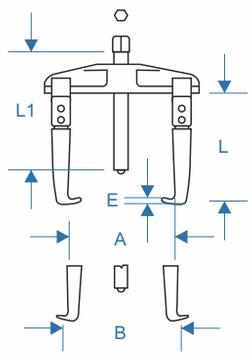

Drop forged 3-jaw gear Puller GRING

Code	L mm/Inch	Capacity	Reach	Spread
42655015	100/4"	2 ton	3 1/4"	4 3/4"
42655016	150/6"	5 ton	5 1/2"	6"
42655017	200/8"	7 ton	7"	8"
42655018	250/10"	9 ton	8 3/4"	11"

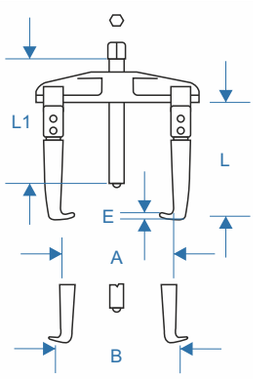

Drop forged 2-jaw gear Puller GRING

Code	L mm/Inch	Capacity	Reach	Spread
42655019	100/4"	2 ton	3 1/4"	4"
42655020	150/6"	5 ton	5 1/2"	6"
42655021	200/8"	7 ton	7"	8"
42655022	250/10"	9 ton	8 3/4"	10"

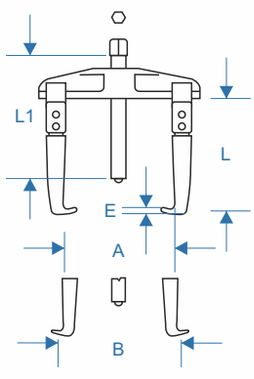

Bearing removal set GRING

Code	Pcs
42655025	9

Coil spring compressor GRING

Code	L mm/Inch
42655026	370/15"

Two way oil filter wrench GRING

Code	D mm
42655027	63-102

Armature bearing puller GRING

Code	Size	Reach
42655028	1#	19-35
42655029	2#	24-55
42655030	3#	35-80

Pilot bearing puller GRING

Code	Size	Reach
42655024	2#	12-38

Bench vices GRING

Code	Specification mm	Max. opening mm
42688003	125	100
42688004	150	125
42688005	200	150

Bench vices GRING

Code	Specification mm	Max. opening mm
42688105	300	300
42688106	350	350
42688107	400	400

Air impact wrench 1/2" GRING

Code:	18401722
Square drive	1/2"
Capacity bolt size	16 mm/5/8"
Free speed	7,000 RPM
Max. torque	260 ft-lbs/353 Nm
Sound level	94 dB (A)
Vibration	10,4 m/s²
Air pressure	90 PSI
Air inlte	1/4"NPT
Avg. air cons.	175 L/Min

Air impact wrench 1/2" GRING

Code:	18401723
Square drive	1/2"
Capacity bolt size	16 mm/5/8"
Free speed	8,000 RPM
Max. torque	650 ft-lbs/880 Nм
Sound level	95 dB (A)
Vibration	10,5 m/s ²
Air pressure	90 PSI
Air inlte	1/4"NPT
Avg. air cons.	175 L/Min

Air impact wrench 1/2" GRING

Code:	18401724
Square drive	1/2"
Free speed	8,500 RPM
Max. torque	1000 ft-lbs/1355 Nm
Sound level	83 dB (A)
Recommend air pressure	90 PSI
Air inlte	1/4"NPT
Avg. air cons.	175 L/Min

Air impact wrench 1/2" GRING

Code:	18401690
Square drive	1/2"
Capacity bolt size	16 mm/5/8"
Free speed	8,000 RPM
Max. torque	420 ft-lbs/570 Nм
Sound level	96 dB (A)
Vibration	10,5 m/s ²
Air pressure	90 PSI
Air inlte	1/4"NPT
Avg. air cons.	175 L/Min

Composite air impact wrench 1/2” GRING

Code	18401693
Square drive	1/2"
Capacity bolt size	25,4 mm/1"
Hammer mechanism	Twin Hammer
Free speed	8,000 RPM
Max. torque	750 ft-lbs/1017 Nm
Recommend air pressure	90 PSI
Air inlte	1/4"NPT
Avg. air cons.	175 L/Min
Min. hose size	3/8" I.D.

Reverse:2 speed
Forward:3 speed

Mini air impact wrench 1/2" GRING

Code:	**18401691**
Square drive	1/2"
Capacity bolt size	16мм/5/8"
Free speed	9,000 RPM
Max. torque	550 ft-lbs/745 Nм
Air pressure	90 PSI
Air inlte	1/4"NPT
Avg. air cons.	173,3 L/Min

Air impact wrench 3/4" GRING

Code	**18401725**
Square drive	3/4"
Capacity bolt size	25,4 мм/1"
Free speed	4,500 RPM
Max. torque	500 ft-lbs/678 Nм
Sound level	91 dB (A)
Vibration	4,2 m/s²
Air pressure	90 PSI
Air inlte	1/4"NPT
Avg. air cons.	200 L/Min

Air impact wrench 3/4" GRING

Code	**18401726**
Square drive	3/4"
Capacity bolt size	25,4 мм/1"
Vibration	6,1 m/s²
Free speed	4,600 RPM
Max. torque	1500 ft-lbs/2,033 Nм
Recommend air pressure	90 PSI
Air inlte	3/8"NPT
Avg. air cons.	191,6 L/Min
Sound level	90 dB (A)

Composite air impact wrench 3/4" GRING

Code	**18401692**
Square drive	3/4"
Capacity bolt size	25,4 мм/1"
Hammer mechanism	Twin Hammer
Free speed	5,000 RPM
Max. torque	1400 ft-lbs/1898 Nм
Sound level	85 dB (A)
Air pressure	90 PSI
Air inlte	3/8"NPT
Avg. air cons.	200 L/Min

Air impact wrench 1" GRING	
Code	18401727
Square drive	1"
Capacity bolt size	45 мм/1-3/4"
Vibration	6,9 m/s²
Free speed	3,000 RPM
Max. torque	1,400 ft-lbs/1,898 Nм
Recommend air pressure	90 PSI
Air inlte	1/2"NPT
Avg. air cons.	233,3 L/Min
Sound level	95 dB (A)
Over length	263 mm

Air impact wrench 1" GRING	
Code	18401751
Square drive	1"
Capacity bolt size	51 мм/2"
Free speed	3,500 RPM
Max. torque	2,800 ft-lbs/3,800 Nм
Recommend air pressure	90 PSI
Air inlte	1/2"NPT
Avg. air cons.	453 L/Min
Weight kg	19

Air impact wrench 1" GRING	
Code	18401752
Square drive	1"
Capacity bolt size	58 мм/2-1/4"
Free speed	3,500 RPM
Max. torque	4,056 ft-lbs/5,500 Nм
Recommend air pressure	90 PSI
Air inlte	1/2"NPT
Avg. air cons.	453 L/Min
Weight kg	21

Air impact wrench 1-1/2" GRING	
Code	18401753
Square drive	1-1/2"
Capacity bolt size	55 мм/2-1/4"
Free speed	3,500 RPM
Max. torque	3,688 ft-lbs/5,000 Nм
Recommend air pressure	90 PSI
Air inlte	1/2"NPT
Avg. air cons.	453 L/Min
Weight kg	20

Air ratchet GRING

Code	**18401729**
Square drive	1/2"
Vibration	10,5 m/s²
Free speed	160 RPM
Max. torque	50 ft-lbs/68 Nм
Recommend air pressure	90 PSI
Air inlte	1/4"NPT
Avg. air cons.	66,6 L/Min
Sound level	92 dB (A)
Over length	263 mm

Air ratchet GRING

Code	**18401730**
Square drive	1/2"
Vibration	10,5 m/s²
Free speed	200 RPM
Max. torque	75 t-lbs/102 Nм
Recommend air pressure	90 PSI
Air inlte	1/4"NPT
Avg. air cons.	66,6 L/Min
Sound level	92 dB (A)
Over length	260 mm

Air hammer needle scaler GRING

Code	**18401688**
Bore diameter (ID)	19,05 мм/3/4"
Stroke length	66 мм/1-5/8"
Blow per min	3,000 BPM
Vibration	6,9 m/s²
Air pressure	90 PSI
Air inlte	1/4"NPT
Avg. air cons.	91,6 L/Min

Air hammer GRING

Code	**18401689**
Sound level	101 dB (A)
Stroke length	41 мм/1-5/8"
Blow per min	4,500 BPM
Vibration	6,9 m/s²
Air pressure	90 PSI
Air inlte	1/4"NPT
Avg. air cons.	183,3 L/Min

Air die grinder 1/4" GRING

Code	**18401687**
Free speed	20,000 RPM
Collet size	3-6 мм/1/8"-1/4"
Sound level	92 dB(A)
Vibration	8.1 m/s²
Air pressure	90 PSI
Air inlte	1/4"NPT
Avg. air cons.	66,6 L/Min
Air exhaust style	Задний/Rear
Over length	168 mm

Air sander 2,5 mm GRING

Code	**18401685**	**18401686**
Sanding paper	130 мм/5"	160 мм/6"
Free speed	10,000 RPM	
Sound level	78 dB(A)	
Vibration	0.8 m/s²	
Air pressure	90 PSI	
Air inlte	1/4"NPT	
Avg. air cons.	150 L/Min	

Air cut off tool 3" GRING

Code	18401684
Collet size	73 мм/2-7/8"
Free speed	22,000 RPM
Sound level	92 dB(A)
Vibration	4,1 m/s²
Air pressure	90 PSI
Air inlte	1/4"NPT
Avg. air cons.	166,6 L/Min

Air angle grinder 5" GRING

Code	18401735
Collet size	125 мм/5"
Free speed	11,000 RPM
Air pressure	90 PSI
Air inlte	1/4"NPT
Avg. air cons.	170 L/Min

Air angle grinder 7" GRING

Code	18401736
Collet size	180 мм/7"
Free speed	7,000 RPM
Air pressure	90 PSI
Air inlte	3/8"NPT
Avg. air cons.	200 L/Min

Spot drill & 2" hook GRING

Code	18401683
Square drive	6,5 or 8 mm
Free speed	1,600 RPM
Vibration	2,4 m/s²
Sound level	85 dB(A)
Air inlte	1/4"NPT
Avg. air cons.	175 L/Min

Composite air drill 3/8" GRING

Code	18401732	18401733
Chuck size	10 мм/3/8"	
Free speed	1,800 RPM	
Sound level	86 dB(A)	
Air pressure	90 PSI	
Avg. air cons.	166,6 L/Min	

Air drill 1/2", 3/8" GRING

Code	18401731	18401734
Collet size	1/2"	3/8"
Free speed	800 RPM	
Sound level	85 dB(A)	
Vibration	0,24 m/s²	
Air pressure	90 PSI	
Avg. air cons.	166,6 L/Min	

Air metal shear GRING

Code	**18401738**
Cutting Capacity:	1,2; 1,6 мм
Width of Cut	5,5 мм/7/32"
Stroke:	2,500 BPM
Air pressure	90 PSI
Air inlte	1/4"NPT
Avg. air cons.	66,6 L/Min

Punch tool GRING

Code	**18401740**
Mole size	5 мм
Cutting Capacity	0,8-1,2 мм
Edje width	12 мм
Air pressure	90 PSI
Min. hose diameter	10 мм
Over length	247мм
Air inlte	1/4"NPT
Avg. air cons.	113 L/Min

Air metal shear GRING

Code	**18401739**
Cutting Capacity:	1,2; 1,6 мм
Stroke:	3,000 BPM
Air pressure	90 PSI
Air inlte	1/4"NPT
Avg. air cons.	66,6 L/Min

Air riveter GRING

Code	**18401743**
Blind rivet setting cap	2,4 мм/3/32"; 3,2 мм/1/8"; 4 мм/5/32"; 4,7 мм/3/16"
Traction Power	1,600 ibs
Air pressure	90 PSI
Air inlte	1/4"NPT
Avg. air cons.	66,6 L/Min

Air hydraulic riveter 3/16" GRING

Code	**18401744**
Blind rivet setting cap	4,7 мм/3/16"
Traction Power	1,870 ibs
Air pressure	90 PSI
Air inlte	1/4"NPT
Avg. air cons.	0,066 L/Min

Air die grinder kit 1/4" GRING

Code		
18401745	Collet Size	3-6 мм/1/8"-1/4"
	Free speed	18,000 RPM
	Sound level	91 dB(A)
	Vibration	5,7 m/s²
	Air pressure	90 PSI
	Air inlte	1/4"NPT
	Avg. air cons.	66,6 L/Min
	Air Exhaust Style	Задний/Rear
	Set	***Pcs***
	Air Die Grinder 1/4"	1
	Mounted Stones	10
	Spanners	2
	Plug	1
	Collet	1
	Sanding Pad	1

Air die grinder kit 1/4" GRING

Code		
18401737	Collet Size	3-6 мм/1/8"-1/4"
	Free speed	20,000 RPM
	Sound level	92 dB(A)
	Vibration	8,1 m/s²
	Air pressure	90 PSI
	Air inlte	1/4" NPT
	Avg. air cons.	66,6 L/Min
	Air Exhaust Style	Задний/Rear
	Set	***Pcs***
	Air Die Grinder 1/4"	1
	Mounted Stones	10
	Spanners	2
	Plug	1
	Collet	1

Air impact wrench kit 1/2"DR GRING

Code		
18401728	Square Drive	1/2"
	Capacity Bolt Size	16 мм/5/8"
	Free speed	7,000 RPM
	Max. Torque	260 ft-lbs/353Nм
	Sound level	94 dB(A)
	Vibration	10,4 m/s²
	Air pressure	90 PSI
	Air inlte	1/4" NPT
	Avg. air cons.	75 L/Min
	Set	***Pcs***
	Air Die Grinder 1/2"	1
	Sockets	10
	Mini oiler	1
	Hex. Wrench	1
	5"Extension bar	1
	Oil pot	1
	Plug	1

Air blow gun GRING

Code	Port size	Nozzle length sm	Nozzle(o.d) mm	Max pressure	Air flow L/m
18401642	1/4"	5	8	15 Bar	1200
18401643		12			

Tire pressure gauge GRING

Code	Port size	Nozzle length sm	Temp range	Max pressure	Pressure gauge
18401644	1/4"	30	-20°C~ +80°C	14 Bar	2"
18401645					
18401646					

Air silicone gun GRING

Code	Nozzle length sm	Temp range	Capacity	Max pressure
18401649	27,5	-20°C~+80°C	250 c.c.	10 Bar

Caulking gun GRING

Code	Type	Volume tube ml	Cartridge
18401662	closed	310/12"	10 oz.
18401663	half open	225/9"	

Air silicone gun GRING

Code	Temp range	Capacity ml	Max pressure
18401648	-20°C~+80°C	300	6 Bar

Air control unit GRING

Code	Port size	Temp range
18401646	3/8"	5-60°C
18401647	1/2"	

Air hose reels GRING

Code	Port size	M
18401641	3/8"	12
18401651		15
18401652		20

Shank grinding stone set GRING

Code	Mm	PCS
18401653	6	5
18401654	3	

Coupler GRING

Code	18401633	18401634
Size	1/4"	
Material	stainless steel	
Working pressure	15 Bar(1,5MRa)	
Maximum pressure	20 Bar(2MRa)	
Temperature range	-20°C~+80°C	

Size: 3/8", 1/2"
Material: stainless steel
Working Pressure: 15 Bar (1,5 MRa)
Maximum Pressure: 20 Bar (2 MRa)
Temperature Range: -20°C~+80°C

Coupler regular type GRING

Hose

Code	Inch
18401601	3/8"
18401602	1/2"

Code	Inch
18401607	3/8"
18401608	1/2"

Connector with interior thread

Code	Inch
18401603	3/8"
18401604	1/2"

Code	Inch
18401609	3/8"
18401610	1/2"

Connector with external thread

Code	Inch
18401605	3/8"
18401606	1/2"

Code	Inch
18401611	3/8"
18401612	1/2"

Coupler industrial type GRING

Code	Inch
18401613	3/8"
18401614	1/2"

Code	Inch
18401615	3/8"
18401616	1/2"

Code	Inch
18401617	3/8"
18401618	1/2"

Code	Inch
18401619	3/8"
18401620	1/2"

Air hose GRING

Code	O.D.	I.D.	Metrs	Temperature	Working Pressure
18401635	3/8"	0,25"	50	-20°C~60°C (-5°F~+140°F)	(at 23°C/ 73.4°F) 135 PSI
18401636	1/2"	0,32"			

Coupler universal GRING

Code	Inch
18401621	3/8"
18401622	1/2"

Code	Inch
18401623	3/8"
18401624	1/2"

Code	Inch
18401627	3/8"
18401628	1/2"

Code	Inch
18401629	3/8"
18401630	1/2"

for hose

Code	Inch
18401625	3/8"
18401626	1/2"

Code	Inch
18401631	3/8"
18401632	1/2"

Air hose GRING

Code	O.D.	I.D.	Metrs	Temperature	Working Pressure
18401637	3/8"	0,25"	10	-20°C~60°C (-5°F~+140°F)	(at 23°C/ 73.4°F) 135 PSI
18401638	1/2"	0,32"			
18401639	3/8"	0,25"			(at 23°C/ 73.4°F) 200 PSI
18401640	1/2"	0,32"			

Screw air compressors GRING

Code	*Model*	*Power kWt*	*Air presure amм./bar*	*Capacity м³/min*	*Cooling*	*Sound emission level*	*Size sm*	*Weight kg*
18401501	sps-300	22	8	3.54	air	74	115x95x142	650
			10	3.21				
			13	2.78				
18401502	sps-500	37	8	5.90		76	130x100x160	850
			10	5.35				
			13	4.36				
18401503	sps-750	55	8	9.12		76	170x110x170	1680
			10	7.75				
			13	6.10				
18401504	sps-1000	75	8	12.70	air-water	78	230x120x170 gear	2000
			10	11.30				
			13	9.66				
18401505	sps-1500	110	8	18.03		79	300x160x173 gear	3050
			10	16.38				
			13	14.29				
18401506	sps-2000	150	8	24.06		80	300x160x173 gear	3360
			10	21.56				
			13	18.18				
18401507	sps-2500	190	8	28.56	water		340x170x203 gear	4120
			10	25.70				
			13	22.20				
18401508	sps-3000	220	8	38.30		83	340x170x203 gear	4720
			10	32.02				
			13	29.04				
18401509	sps-4000	300	8	50			430x180x200	5380
18401510	sps-5000	375	8	64			450x180x200	6220
18401511	sps-6000	450	8	71.80			450x200x200	7500

Non-Sparking Tools are the best alternative for non-sparking application purposes in potentially explosive environments. All tools are forget after casting to achieve the best quality in the market.

Cooper-Barylium Alloy		
Composition	Be	1,8% - 2%
	Ni+Co	0,2% - 1,2%
	other	≤ 0,5%
		Cu
Hardness	35-40 Hrc (HB 283-365)	
Tensile Strength	1250 N/mm²	
Magnetism	Non ferrous substance in the composition makes it safer when non-magnetic applications are required	
Durability	Much higher due to the higher hardness and tensile strength. Higher efforts can be made	

Cooper-Aluminium Alloy		
Composition	Al	10% - 12%
	Ni	4% - 6%
	Fe+Mn	≤ 5,8%
	other	≤ 0,5
Hardness	25-30 Hrc (HB 229-291)	
Tensile Strength	800 N/mm²	
Magnetism	Minimum ferrous component makes them not 100% non-magnetic, although its low magnetism make it for non critical non-magnetic applications	
Durability	Not as Be-Cu	

Caution!
These tools are not classified as anti-static because they do conduct electricity. Do not use high copper content tools (>65%) in direct contact with acetylene due to the possible formation of explosive acetylide, specially in the presence of moisture.

Socket 3/8" DR 12-PT GRING

Al-Cu

Code	S mm	L mm	WT g	Code	S inch	L mm	WT g
15801001	5	28	32	15801101	5/16"	28	32
15801002	5,5			15801102	3/8"		
15801003	6			15801103	7/16"	32	45
15801004	7			15801104	1/2"		
15801005	8			15801105	9/16"		
15801006	9			15801106	5/8"		65
15801007	10	32	45	15801107	11/16"		
15801008	11			15801108	3/4"		
15801009	12			15801109	13/16"	35	80
15801010	13			15801110	7/8"		95
15801011	14			15801111	15/16"		105
15801012	15		48				
15801013	16		53				
15801014	17		57				
15801015	19		62				
15801016	20		70				

Be-Cu

Code	S mm	L mm	WT g	Code	S inch	L mm	WT g
15901001	5	28	35	15901101	5/16"	28	35
15901002	5,5			15901102	3/8"		
15901003	6			15901103	7/16"	32	50
15901004	7			15901104	1/2"		
15901005	8			15901105	9/16"		
15901006	9			15901106	5/8"		71
15901007	10	32	50	15901107	11/16"		72
15901008	11			15901108	3/4"		
15901009	12			15901109	13/16"	35	87
15901010	13			15901110	7/8"		104
15901011	14			15901111	15/16"		115
15901012	15		53				
15901013	16		58				
15901014	17		63				
15901015	19		68				
15901016	20		77				

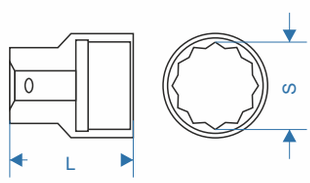

Socket 1/2" DR 12-PT GRING

Al-Cu

Code	S mm	L mm	WT g	Code	S inch	L mm	WT g
15802001	6	40	69	15802201	5/16"	40	70
15802002	7		70	15802202	3/8"		71
15802003	8			15802203	7/16"		72
15802004	9		71	15802204	1/2"		73
15802005	10			15802205	9/16"		73
15802006	11		72	15802206	5/8"		80
15802007	12			15802207	11/16"		85
15802008	13		73	15802208	3/4"	42	100
15802009	14			15802209	13/16"	43	110
15802010	15		85	15802210	7/8"		115
15802011	16			15802211	15/16"		145
15802012	17			15802212	1"		170
15802013	18	42		15802213	1-1/16"	46	190
15802014	19		100	15802214	1-1/4"		260
15802015	20		105				
15802016	21	43	110				
15802017	22		115				
15802018	23		135				
15802019	24		145				
15802020	25		160				
15802021	26		180				
15802022	27	46	190				
15802023	28		200				
15802024	29		210				
15802025	30		220				
15802026	32		260				

Be-Cu

Code	S mm	L mm	WT g	Code	S inch	L mm	WT g
15902001	6	40	75	15902201	5/16"	40	70
15902002	7		77	15902202	3/8"		78
15902003	8			15902203	7/16"		79
15902004	9		78	15902204	1/2"		80
15902005	10			15902205	9/16"		80
15902006	11		79	15902206	5/8"		88
15902007	12			15902207	11/16"		93
15902008	13		80	15902208	3/4"	42	110
15902009	14			15902209	13/16"	43	125
15902010	15		94	15902210	7/8"		130
15902011	16			15902211	15/16"		165
15902012	17			15902212	1"		190
15902013	18	42		15902213	1-1/16"	46	215
15902014	19		110	15902214	1-1/4"		295
15902015	20		120				
15902016	21	43	125				
15902017	22		130				
15902018	23		150				
15902019	24		165				
15902020	25		180				
15902021	26		200				
15902022	27	46	215				
15902023	28		225				
15902024	29		235				
15902025	30		250				
15902026	32		295				

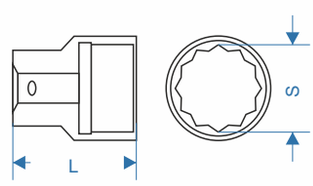

Socket 3/4"DR 12-PT GRING

Al-Cu

Code	S mm	L mm	WT g	Code	S inch	L mm	WT g
15803001	17	50	225	**15803301**	3/4"	50	220
15803002	19			**15803302**	13/16"	55	240
15803003	21	55	245	**15803303**	7/8"		245
15803004	22			**15803304**	15/16"		280
15803005	23		280	**15803305**	1"		280
15803006	24			**15803306**	1-1/16"		285
15803007	26			**15803307**	1-1/8"		315
15803008	27		285	**15803308**	1-3/16"	60	365
15803009	28		310	**15803309**	1-1/4"		400
15803010	29		320	**15803310**	1-5/16"		430
15803011	30	60	370	**15803311**	1-3/8"		470
15803012	31		380	**15803312**	1-7/16"		480
15803013	32		410	**15803313**	1-1/2"		530
15803014	34		440	**15803314**	1-5/8"	65	640
15803015	36		465	**15803315**	1-3/4"		695
15803016	38		510	**15803316**	1-13/16"		705
15803017	41	65	640	**15803317**	1-7/8"		750
15803018	46		690	**15803318**	2"	70	870
15803019	50	70	825				

Be-Cu

Code	S mm	L mm	WT g	Code	S inch	L mm	WT g
15903001	17	50	246	**15903301**	3/4"	50	240
15903002	19			**15903302**	13/16"	55	262
15903003	21	55	268	**15903303**	7/8"		267
15903004	22			**15903304**	15/16"		305
15903005	23		306	**15903305**	1"		310
15903006	24		307	**15903306**	1-1/16"		315
15903007	26			**15903307**	1-1/8"		345
15903008	27		312	**15903308**	1-3/16"	60	400
15903009	28		339	**15903309**	1-1/4"		437
15903010	29		350	**15903310**	1-5/16"		472
15903011	30	60	410	**15903311**	1-3/8"		515
15903012	31		430	**15903312**	1-7/16"		525
15903013	32		465	**15903313**	1-1/2"		580
15903014	34		480	**15903314**	1-5/8"	65	702
15903015	36		510	**15903315**	1-3/4"		761
15903016	38		555	**15903316**	1-13/16"		830
15903017	41	65	660	**15903317**	1-7/8"		850
15903018	46		765	**15903318**	2"	70	965
15903019	50	70	910				

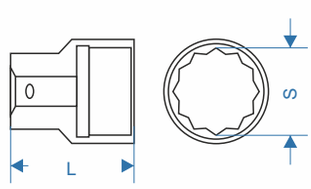

Socket 1"DR 12-PT GRING

Al-Cu

Code	S mm	L mm	WT g	Code	S inch	L mm	WT g
15804001	22	55	330	**15804401**	1-1/16"	55	360
15804002	24		340	**15804402**	1-1/8"		364
15804003	25		345	**15804403**	1-3/16"	60	405
15804004	26		350	**15804404**	1-1/4"		431
15804005	27		360	**15804405**	1-5/16"		442
15804006	28		363	**15804406**	1-3/8"		448
15804007	29		365	**15804407**	1-7/16"	65	500
15804008	30	60	405	**15804408**	1-1/2"		560
15804009	31		410	**15804409**	1-5/8"	70	625
15804010	32		440	**15804410**	1-7/8"	75	740
15804011	34		455	**15804411**	2"		850
15804012	36	65	500	**15804412**	2-1/4"	80	1130
15804013	38		560	**15804413**	2-1/2"	90	1550
15804014	41	70	625	**15804414**	2-3/4"		1850
15804015	46	75	740	**15804415**	3"	95	2500
15804016	50		760				
15804017	55	80	1160				
15804018	60	85	1260				
15804019	65	90	1580				
15804020	70		1950				
15804021	75	95	2430				
15804022	80		2800				

Be-Cu

Code	S mm	L mm	WT g	Code	S inch	L mm	WT g
15904001	22	55	361	**15904401**	1-1/16"	55	394
15904002	24		372	**15904402**	1-1/8"		398
15904003	25		377	**15904403**	1-3/16"	60	442
15904004	26		383	**15904404**	1-1/4"		470
15904005	27		394	**15904405**	1-5/16"		483
15904006	28		397	**15904406**	1-3/8"		490
15904007	29		399	**15904407**	1-7/16"	65	560
15904008	30	60	443	**15904408**	1-1/2"		620
15904009	31		448	**15904409**	1-5/8"	70	690
15904010	32		481	**15904410**	1-7/8"	75	850
15904011	34		497	**15904411**	2"		960
15904012	36	65	550	**15904412**	2-1/4"	80	1250
15904013	38		620	**15904413**	2-1/2"	90	1700
15904014	41	70	690	**15904414**	2-3/4"		2050
15904015	46	75	850	**15904415**	3"	95	2750
15904016	50		850				
15904017	55	80	1160				
15904018	60	85	1390				
15904019	65	90	1750				
15904020	70		2150				
15904021	75	95	2680				
15904022	80		3080				

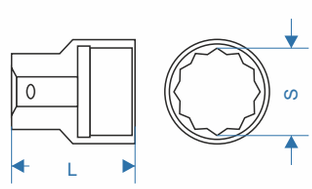

Combination wrench GRING

Al-Cu

Code	S mm	L mm	WT g	Code	S inch	L mm	WT g
17001001	6	105	20	17001101	1/4"	105	20
17001002	7	120	34	17001102	5/16"	120	34
17001003	8			17001103	3/8"	135	50
17001004	9	135	50	17001104	7/16"	150	70
17001005	10			17001105	1/2"	175	115
17001006	11	150	75	17001106	9/16"		110
17001007	12		70	17001107	19/32"	195	145
17001008	13	175	110	17001108	5/8"		140
17001009	14			17001109	11/16"		
17001010	15	195	145	17001110	3/4"	215	190
17001011	16		140	17001111	13/16"	230	200
17001012	17			17001112	7/8"	245	225
17001013	18	215	190	17001113	15/16"	265	230
17001014	19			17001114	1"	290	380
17001015	20	230	200	17001115	1-1/16"		
17001016	21			17001116	1-1/8"	320	500
17001017	22	245	220	17001117	1-3/16"		
17001018	23	265	233	17001118	1-1/4"	340	600
17001019	24		230	17001119	1-5/16"	360	750
17001020	25			17001120	1-3/8"		800
17001021	26	290	380				
17001022	27						
17001024	30	320	500				
17001025	32	340	600				
17001026	34	360	750				
17001027	35		800				
17001028	36						
17001029	38	395	1150				
17001030	41	430	1300				
17001031	46	480	1700				
17001032	50	520	2000				
17001033	55	560	2230				
17001034	60	595	2950				
17001035	65		2900				
17001036	70	630	4100				

Be-Cu

Code	S mm	L mm	WT g	Code	S inch	L mm	WT g
17101001	6	105	22	17101101	1/4"	105	22
17101002	7	120	37	17101102	5/16"	120	37
17101003	8			17101103	3/8"	135	55
17101004	9	135	55	17101104	7/16"	150	75
17101005	10			17101105	1/2"	175	125
17101006	11	150	75	17101106	9/16"		122
17101007	12			17101107	19/32"	195	160
17101008	13	175	122	17101108	5/8"		155
17101009	14			17101109	11/16"		
17101010	15	195	160	17101110	3/4"	215	210
17101011	16		155	17101111	13/16"	230	225
17101012	17			17101112	7/8"	245	250
17101013	18	215	210	17101113	15/16"	265	260
17101014	19			17101114	1"	290	420
17101015	20	230	225	17101115	1-1/16"		
17101016	21			17101116	1-1/8"	320	560
17101017	22	245	250	17101117	1-3/16"		
17101018	23	265	265	17101118	1-1/4"	340	670
17101019	24		260	17101119	1-5/16"	360	850
17101020	25			17101120	1-3/8"		890
17101021	26	290	420				
17101022	27						
17101024	30	320	560				
17101025	32	340	670				
17101026	34	360	850				
17101027	35		890				
17101028	36						
17101029	38	395	1200				
17101030	41	430	1440				
17101031	46	480	1890				
17101032	50	520	2220				
17101033	55	560	2460				
17101034	60	595	3300				
17101035	65		3250				
17101036	70	630	4550				

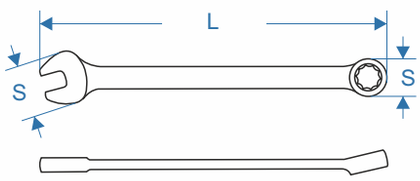

Double open end wrench GRING

Al-Cu

Code	S1 x S2 mm	L mm	WT g
17002001	14x17	160	100
17002002	17x19	180	110
17002003	19x22	200	140
17002004	19x24	220	160
17002005	22x24	230	220
17002006	24x27	255	305
17002007	27x30	280	380
17002008	30x32	300	480
17002009	32x36	320	570
17002010	34x36	330	670
17002011	36x41	350	810
17002012	41x46	380	955
17002013	46x50	420	1190
17002014	50x55	460	1720
17002015	55x60	500	2530

Be-Cu

Code	S1 x S2 mm	L mm	WT g
17102001	14x17	160	110
17102002	17x19	180	120
17102003	19x22	200	160
17102004	19x24	220	180
17102005	22x24	230	240
17102006	24x27	255	340
17102007	27x30	280	420
17102008	30x32	300	530
17102009	32x36	320	635
17102010	34x36	330	740
17102011	36x41	350	900
17102012	41x46	380	1060
17102013	46x50	420	1310
17102014	50x55	460	1900
17102015	55x60	500	2800

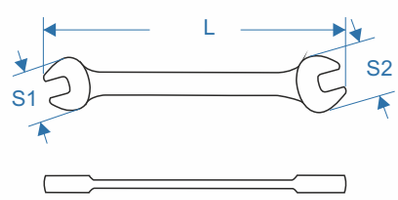

Box end offset wrench GRING

Al-Cu				Be-Cu			
Code	S1 x S2 mm	L mm	WT g	Code	S1 x S2 mm	L mm	WT g
17003001	5.5x7	115	20	17103001	5.5x7	115	22
17003002	6x7			17103002	6x7		
17003003	6x8			17103003	6x8		
17003004	7x9	130	22	17103004	7x9	130	25
17003005	8x9		23	17103005	8x9		50
17003006	8x10			17103006	8x10		
17003007	9x10	140	46	17103007	9x10	140	55
17003008	9x11			17103008	9x11		
17003009	10x11		50	17103009	10x11		70
17003010	10x12			17103010	10x12		
17003011	10x13			17103011	10x13		
17003012	10x14	160	65	17103012	10x14	160	80
17003013	11x13			17103013	11x13		
17003014	12x13		70	17103014	12x13		85
17003015	12x14			17103015	12x14		
17003016	14x15	220	75	17103016	14x15	220	95
17003017	14x17			17103017	14x17		
17003018	16x17		78	17103018	16x17		120
17003019	16x18			17103019	16x18		
17003020	17x19	250	110	17103020	17x19	250	151
17003021	17x21			17103021	17x21		
17003022	17x22			17103022	17x22		
17003023	18x19			17103023	18x19		
17003024	19x21	280	140	17103024	19x21	280	170
17003025	19x22			17103025	19x22		
17003026	19x24	310	180	17103026	19x24	310	205
17003027	20x22		202	17103027	20x22		220
17003028	21x23	285	205	17103028	21x23	285	225
17003029	21x26	320		17103029	21x26	320	
17003030	22x24	310	220	17103030	22x24	310	290
17003031	22x27			17103031	22x27		295
17003032	23x26			17103032	23x26		310
17003033	24x26	340	265	17103033	24x26	340	355
17003034	24x27			17103034	24x27		405
17003035	24x30	350	270	17103035	24x30	350	420
17003036	25x28			17103036	25x28		450
17003037	26x29	370	280	17103037	26x29	370	455
17003038	26x32		320	17103038	26x32		520
17003039	27x29	360	360	17103039	27x29	360	550
17003040	27x30		410	17103040	27x30		580
17003041	27x32		415	17103041	27x32		640
17003042	29x32	380	475	17103042	29x32	380	680
17003043	30x32		501	17103043	30x32		705
17003044	30x36	405	530	17103044	30x36	405	760
17003045	32x34	400	570	17103045	32x34	400	805
17003046	31x35	405	645	17103046	31x35	405	915
17003047	32x36		735	17103047	32x36		1145
17003048	34x36	420	1030	17103048	34x36	420	1080
17003049	35x41		980	17103049	35x41		1145
17003050	36x38	445	1030	17103050	36x38	445	1165
17003051	36x41		1065	17103051	36x41		1120
17003052	38x40		1465	17103052	38x40		1600
17003053	41x46	470	1905	17103053	41x46	470	2077
17003054	46x50	490	2315	17103054	46x50	490	2530
17003055	50x55	510	2360	17103055	50x55	510	2580
17003056	50x60	520	2745	17103056	50x60	520	3002
17003057	55x60	530	2905	17103057	55x60	530	3203
17003058	60x70	560	3605	17103058	60x70	560	4105

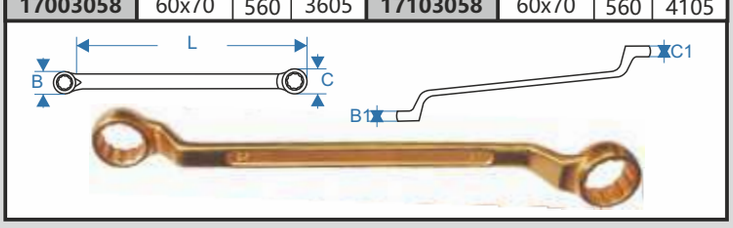

Single open end wrench GRING

Al-Cu				Be-Cu			
Code	S mm	L mm	WT g	Code	S mm	L mm	WT g
17004001	8	95	35	17104001	8	95	40
17004002	10	105	45	17104002	10	105	50
17004003	12	125	60	17104003	12	125	65
17004004	14	140	85	17104004	14	140	95
17004005	17	160	95	17104005	17	160	105
17004006	19	170	115	17104006	19	170	130
17004007	22	195	152	17104007	22	195	170
17004008	24	220	170	17104008	24	220	190
17004009	27	240	260	17104009	27	240	285
17004010	30	260	290	17104010	30	260	320
17004011	32	275	365	17104011	32	275	400
17004012	34	290	410	17104012	34	290	455
17004013	36	310	480	17104013	36	310	530
17004014	41	345	555	17104014	41	345	615
17004015	46	375	860	17104015	46	375	950
17004016	50	410	950	17104016	50	410	1080
17004017	55	450	1200	17104017	55	450	1380
17004018	60	490	1700	17104018	60	490	1950
17004019	65	530	2000	17104019	65	530	2250
17004020	70	570	2550	17104020	70	570	2850
17004021	75	610	2800	17104021	75	610	3200

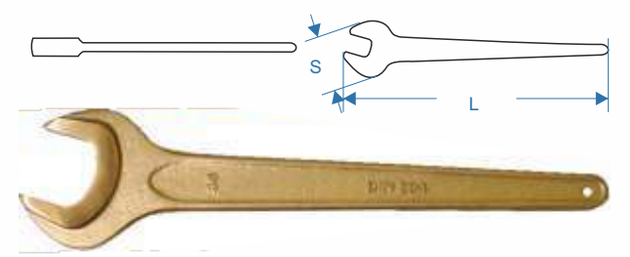

Offset type construction wrench with pin GRING

Al-Cu				Be-Cu			
Code	S mm	L mm	WT g	Code	S mm	L mm	WT g
17005001	17	320	195	17105001	17	320	210
17005002	19	350	290	17105002	19	350	320
17005003	22		390	17105003	22		430
17005004	24	370	430	17105004	24	370	480
17005005	27		580	17105005	27		640
17005006	30	400	720	17105006	30	400	800
17005007	32		720	17105007	32		800
17005008	36	430	860	17105008	36	430	950
17005009	41	470	1150	17105009	41	470	1270
17005010	46	500	1445	17105010	46	500	1600
17005011	50	530	1700	17105011	50	530	1885
17005012	55	560	1950	17105012	55	560	2160

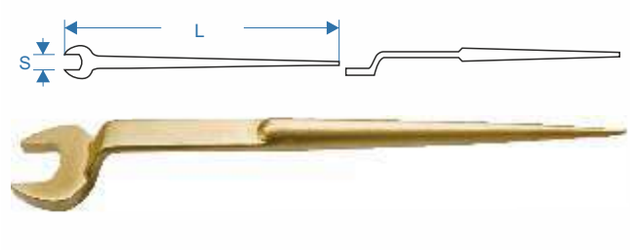

Single box-end impact wrench GRING

Al-Cu				Be-Cu			
Code	*S mm*	*L mm*	*WT g*	*Code*	*S mm*	*L mm*	*WT g*
17007001	17	145	125	**17107001**	17	145	140
17007002	19	145	125	**17107002**	19	145	140
17007003	22	155	160	**17107003**	22	155	180
17007004	24	165	220	**17107004**	24	165	250
17007005	27	175	315	**17107005**	27	175	350
17007006	30	185	430	**17107006**	30	185	475
17007007	32	185	450	**17107007**	32	185	490
17007008	34	200	490	**17107008**	34	200	540
17007009	36	205	520	**17107009**	36	205	580
17007010	38	215	620	**17107010**	38	215	680
17007011	41	225	680	**17107011**	41	225	755
17007012	46	235	890	**17107012**	46	235	990
17007013	50	250	1030	**17107013**	50	250	1145
17007014	55	265	1300	**17107014**	55	265	1440
17007015	60	274	1450	**17107015**	60	274	1620
17007016	65	298	1800	**17107016**	65	298	1995
17007017	70	320	2200	**17107017**	70	320	2435
17007018	75	326	2720	**17107018**	75	326	3010
17007019	80	350	3250	**17107019**	80	350	3600
17007020	85	355	3915	**17107020**	85	355	4330
17007021	90	380	4700	**17107021**	90	380	5200
17007022	95	390	4920	**17107022**	95	390	5450
17007023	100	410	6100	**17107023**	100	410	6750
17007024	105	420	6320	**17107024**	105	420	7000
17007025	110	445	7250	**17107025**	110	445	8000
17007026	120	480	9930	**17107026**	120	480	11000
17007027	130	520	11400	**17107027**	130	520	12610
17007028	140	520	11750	**17107028**	140	520	13000
17007029	150	565	13100	**17107029**	150	565	14500

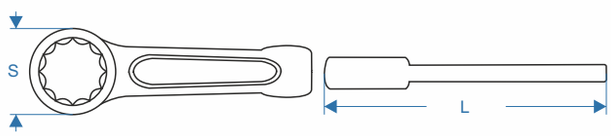

Single open end impact wrench GRING

Al-Cu				Be-Cu			
Code	*S mm*	*L mm*	*WT g*	*Code*	*S mm*	*L mm*	*WT g*
17006001	17	125	135	**17106001**	17	125	150
17006002	19	125	135	**17106002**	19	125	150
17006003	22	135	175	**17106003**	22	135	195
17006004	24	150	220	**17106004**	24	150	245
17006005	27	175	350	**17106005**	27	175	385
17006006	30	190	420	**17106006**	30	190	465
17006007	32	190	460	**17106007**	32	190	515
17006008	36	210	615	**17106008**	36	210	675
17006009	41	230	860	**17106009**	41	230	955
17006010	46	250	1100	**17106010**	46	250	1225
17006011	50	275	1420	**17106011**	50	275	1560
17006012	55	305	1830	**17106012**	55	305	2025
17006013	60	315	2120	**17106013**	60	315	2345
17006014	65	335	2780	**17106014**	65	335	3060
17006015	70	370	3660	**17106015**	70	370	4030
17006016	75	375	4030	**17106016**	75	375	4660
17006017	80	400	5130	**17106017**	80	400	5650
17006018	85	400	5400	**17106018**	85	400	6000
17006019	90	445	7050	**17106019**	90	445	7800
17006020	95	445	7000	**17106020**	95	445	7730
17006021	100	485	10500	**17106021**	100	485	11600
17006022	110	513	12000	**17106022**	110	513	13500

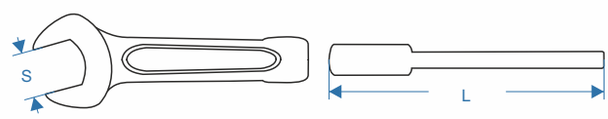

Bung wrench GRING

Al-Cu					Be-Cu				
Code	*L mm/Inch*	*H_1 mm*	*H_2 mm*	*WT g*	*Code*	*L mm/Inch*	*H_1 mm*	*H_2 mm*	*WT g*
17009701	385/15,4"	93	61	1150	**17109701**	385/15,4"	93	61	1250

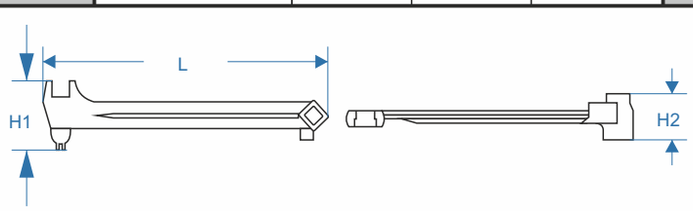

Pipe wrench GRING

Al-Cu				Be-Cu			
Code	*L mm/Inch*	*Max. girth mm*	*WT g*	*Code*	*L mm/Inch*	*Max. girth mm*	*WT g*
17009201	240/9,6"	45	470	**17109201**	240/9,6"	45	510
17009202	254/10,16"	48	560	**17109202**	254/10,16"	48	615
17009203	305/12,5"	58	820	**17109203**	305/12,5"	58	910
17009204	350/14"	65	1120	**17109204**	350/14"	65	1220
17009205	380/15,2"	70	1340	**17109205**	380/15,2"	70	1465

Al-Cu				Be-Cu			
Code	*L mm/Inch*	*Max. girth mm*	*WT g*	*Code*	*L mm/Inch*	*Max. girth mm*	*WT g*
17009401	430/17,2"	38	1400	**17109401**	430/17,2"	38	1550
17009402	530/21,2"	50	2000	**17109402**	530/21,2"	50	2230

Al-Cu				Be-Cu			
Code	*L mm/Inch*	*D*	*WT g*	*Code*	*L mm/Inch*	*D*	*WT g*
17009404	530/21,2"	2"	2355	**17109404**	530/21,2"	2"	2605

Al-Cu				Be-Cu			
Code	*L mm/Inch*	*Max. girth mm*	*WT g*	*Code*	*L mm/Inch*	*Max. girth mm*	*WT g*
17009403	430/17,2"	38	1330	**17109403**	430/17,2"	38	1480

Al-Cu				Be-Cu			
Code	*L mm/Inch*	*Max. girth mm*	*WT g*	*Code*	*L mm/Inch*	*Max. girth mm*	*WT g*
17009301	200/8"	25	380	**17109301**	200/8"	25	420
17009302	250/10"	30	670	**17109302**	250/10"	30	735
17009303	300/12"	40	955	**17109303**	300/12"	40	1050
17009304	350/14"	50	1195	**17109304**	350/14"	50	1315
17009305	450/18"	60	2050	**17109305**	450/18"	60	2255
17009306	600/24"	75	3150	**17109306**	600/24"	75	3465
17009307	900/36"	85	5345	**17109307**	900/36"	85	5880
17009308	1200/48"	110	11450	**17109308**	1200/48"	110	12600

Adjustable wrench GRING

Al-Cu				Be-Cu			
Code	L mm/Inch	Max. girth mm	WT g	Code	L mm/Inch	Max. girth mm	WT g
17009101	150/6"	18	130	17109101	150/6"	18	145
17009102	200/8"	24	240	17109102	200/8"	24	275
17009103	250/10"	30	435	17109103	250/10"	30	485
17009104	300/12"	36	715	17109104	300/12"	36	780
17009105	375/15"	46	1415	17109105	375/15"	46	1545

Al-Cu				Be-Cu			
Code	L mm/Inch	Max. girth mm	WT g	Code	L mm/Inch	Max. girth mm	WT g
17009001	100/4"	13	30	17109001	100/4"	13	33
17009002	150/6"	18	130	17109002	150/6"	18	145
17009003	200/8"	24	240	17109003	200/8"	24	275
17009004	250/10"	30	435	17109004	250/10"	30	485
17009005	300/12"	36	715	17109005	300/12"	36	780
17009006	375/15"	46	1415	17109006	375/15"	46	1545
17009007	450/18"	55	2120	17109007	450/18"	55	2360
17009008	600/24"	65	4300	17109008	600/24"	65	4700

Ring wrench for extension GRING

Al-Cu				Be-Cu			
Code	S mm	L mm	WT g	Code	S mm	L mm	WT g
17008001	24	180	430	17108001	24	180	475
17008002	27	190	480	17108002	27	190	530
17008003	30	200	525	17108003	30	200	580
17008004	32	235	715	17108004	32	235	795
17008005	36	245	815	17108005	36	245	900
17008006	41	265	955	17108006	41	265	1060
17008007	46	280	1340	17108007	46	280	1480
17008008	50	290	1530	17108008	50	290	1690
17008009	55	300	1670	17108009	55	300	1850
17008010	60	345	2670	17108010	60	345	2960
17008011	65	355	3055	17108011	65	355	3380
17008012	70	365	3530	17108012	70	365	3910
17008013	75	375	3920	17108013	75	375	4335
17008014	80	385	4680	17108014	80	385	5180

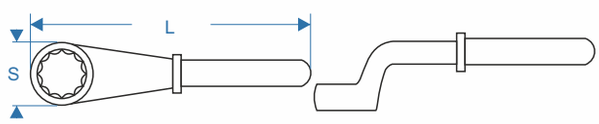

Ratchet wrench GRING

Al-Cu				Be-Cu			
Code	S mm	L mm	WT g	Code	S mm	L mm	WT g
17009601	9	150	110	17109601	9	150	125
17009602	11			17109602	11		
17009603	13	155	140	17109603	13	155	160
17009604	14			17109604	14		
17009605	17	200	230	17109605	17	200	260
17009606	19			17109606	19		
17009607	22	220	300	17109607	22	220	340
17009608	24			17109608	24		
17009609	27	245	500	17109609	27	245	560
17009610	30	280	750	17109610	30	280	840
17009611	32			17109611	32		
17009612	36	290	1050	17109612	36	290	1180
17009613	41	295	1100	17109613	41	295	1230
17009614	46	360	1850	17109614	46	360	2060
17009615	50		2000	17109615	50		2230
17009616	55	440	2600	17109616	55	440	2900
17009617	60			17109617	60		

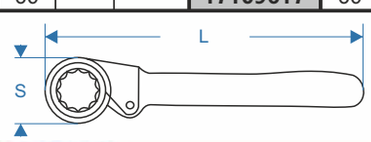

Combination wrench set GRING

Al-Cu

Code	Set mm	WT g	Pcs
17000100	8, 10, 12, 14, 17, 19, 22, 24, 27	1655	9
17000101	8, 10, 12, 14, 17, 19, 23, 24, 27, 30, 32	2955	11
17000102	8, 10, 12, 13, 14, 16, 17, 19, 22, 24, 27, 30, 32	3175	13

Be-Cu

Code	Set mm	WT g	Pcs
17100100	8, 10, 12, 14, 17, 19, 22, 24, 27	1815	9
17100101	8, 10, 12, 14, 17, 19, 23, 24, 27, 30, 32	3235	11
17100102	8, 10, 12, 13, 14, 16, 17, 19, 22, 24, 27, 30, 32	3485	13

Brush wheel GRING

Al-Cu

Code	L mm	H mm	Rows pcs	WT g
18001001	255	30	4x16	180

Code	M mm	H mm	Ø mm	WT g
18001101	14	15	125	140
18001201		30	100	480
18001301		15	125	320
18001401		30	100	580

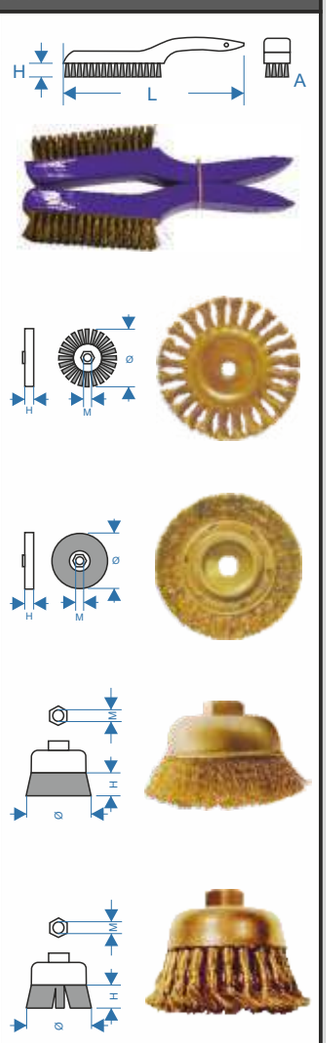

Ratchet wrench GRING

Al-Cu

Code	Square drive inch	L mm/Inch	H mm	WT g
16001001	3/8"	200/8"	30	260
16001002	1/2"	245/9,8"	43	615
16001003	3/4"	320/12,8"	57	1430
16001004	1"	550/22"	67	3150

Be-Cu

Code	Square drive inch	L mm/Inch	H mm	WT g
16101001	3/8"	200/8"	30	290
16101002	1/2"	245/9,8"	43	690
16101003	3/4"	320/12,8"	57	1570
16101004	1"	550/22"	67	3470

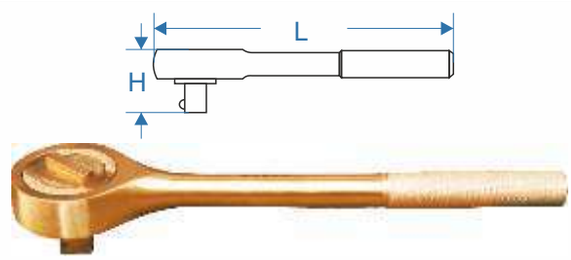

Single open end Chain wrench GRING

Al-Cu

Code	D_{max} mm	L mm	WT g
17009501	600	100	1910

Be-Cu

Code	S mm	L mm	WT g
17109501	600	100	2105

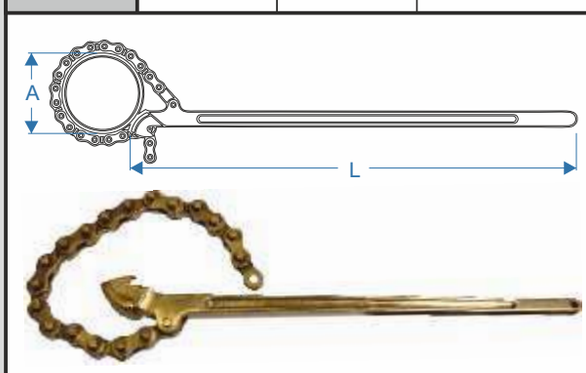

Edging spade GRING

Al-Cu				
Code	L mm	H mm	B mm	WT g
17507001	1390	290	195	3200
17507002	1440	340	175	3480
Be-Cu				
Code	L mm	H mm	B mm	WT g
17607001	1390	290	195	3500
17607002	1440	340	175	3700

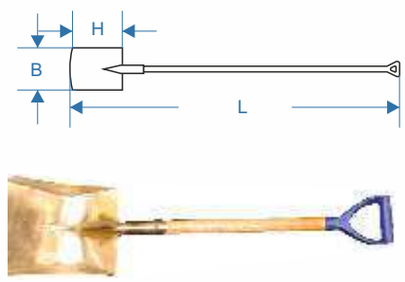

Al-Cu				
Code	L mm	H mm	B mm	WT g
17507101	830	300	170	1220
Be-Cu				
Code	L mm	H mm	B mm	WT g
17607101	830	300	170	1300

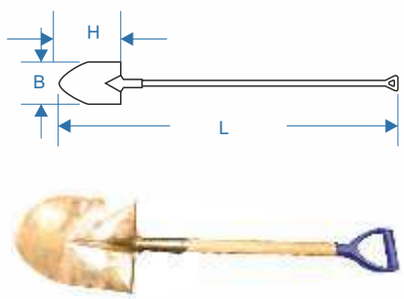

Oil dipper GRING

Be-Cu			
Code	L mm	Ø mm	WT g
17202001	350	85	163

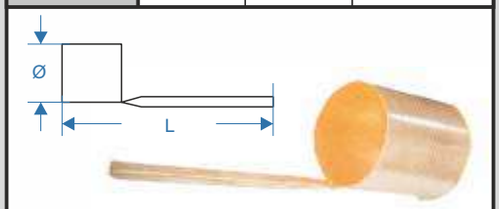

Bung wrench GRING

Be-Cu			
Code	L mm	Ø mm	WT g
17201001	1100	165	2315

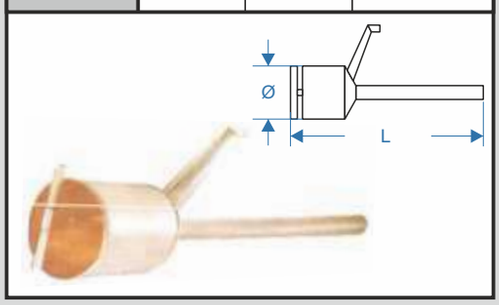

Files flat GRING

Be-Cu				
Code	L mm/Inch	B mm	H mm	WT g
17603001	150/6"	16	4	75
17603002	200/8"	21	4,5	160
17603003	250/10"	25	6	282
17603004	300/12"	30	6,5	455
17603005	350/14"	32	8	675
17603006	400/16"	32	9,5	925

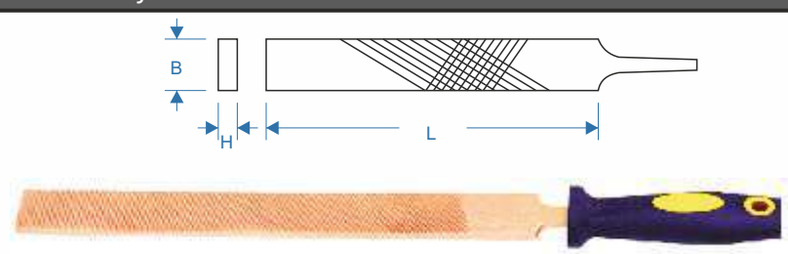

Files half round GRING

Be-Cu				
Code	L mm/Inch	B mm	H mm	WT g
17603101	150/6"	22	6	105
17603102	200/8"	23	7	190
17603103	250/10"	26	8	255
17603104	300/12"	28	9	375
17603105	350/14"	30	10	565

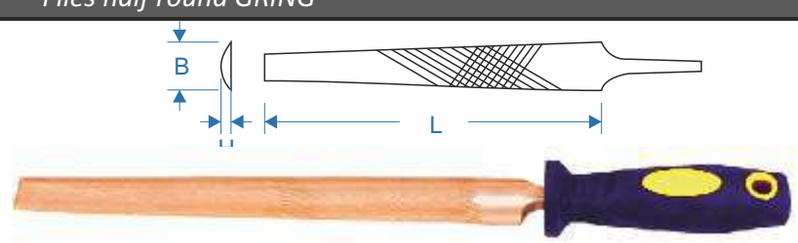

Files round GRING

Be-Cu			
Code	L mm/Inch	Ø mm	WT g
17603201	150/6"	6,5	45
17603202	200/8"	7,5	91
17603203	250/10"	8,5	122
17603204	300/12"	9,5	180
17603205	350/14"	10,5	250

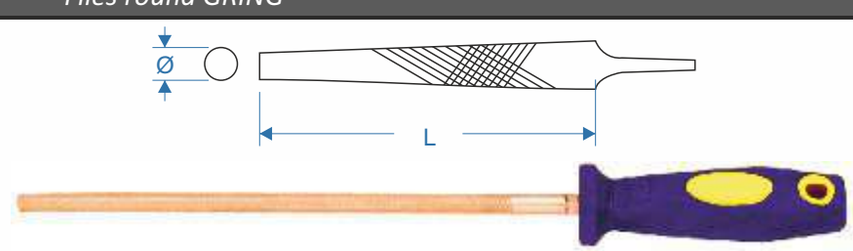

Sledge hamme GRING

Al-Cu				Be-Cu			
Code	H g	L mm	WT g	Code	H g	L mm	WT g
17506101	450	310	610	**17606101**	450	310	750
17506102	1000	400	1300	**17606102**	1000	400	1400
17506103	1400	400	1700	**17606103**	1400	400	1810
17506104	1500	400	1800	**17606104**	1500	400	1920
17506105	1800	400	2100	**17606105**	1800	400	2200
17506106	2000	400	2300	**17606106**	2000	400	2470
17506107	2200	400	2500	**17606107**	2200	400	2650
17506108	2500	700	3210	**17606108**	2500	700	3340
17506109	2700	700	3410	**17606109**	2700	700	3510
17506110	3000	700	3710	**17606110**	3000	700	3910
17506111	3600	700	4310	**17606111**	3600	700	4600
17506112	4000	900	4910	**17606112**	4000	900	5010
17506113	4500	900	5410	**17606113**	4500	900	5780
17506114	5000	900	5910	**17606114**	5000	900	6100
17506115	5400	900	6310	**17606115**	5400	900	6560
17506116	6400	900	7310	**17606116**	6400	900	7440
17506117	7200	900	8110	**17606117**	7200	900	8350
17506118	8000	900	8910	**17606118**	8000	900	9080
17506119	8200	900	9110	**17606119**	8200	900	9310
17506120	9100	900	10010	**17606120**	9100	900	10120
17506121	9900	900	10810	**17606121**	9900	900	11170

Axe fireman GRING

Al-Cu				
Code	L mm	H g	B mm	WT g
17506201	340	190	98	1300
Be-Cu				
Code	L mm	H g	B mm	WT g
17606201	340	190	98	1425

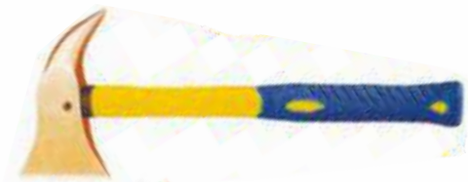

Al-Cu				
Code	L mm	H g	B mm	WT g
17506301	340	145	82	890
Be-Cu				
Code	L mm	H g	B mm	WT g
17606301	340	145	82	980

Water pump pliers GRING

Al-Cu			
Code	L mm/Inch	K_{max} mm	WT g
17305001	250/10"	32	335
Be-Cu			
Code	L mm/Inch	K_{max} mm	WT g
17405001	250/10"	32	365

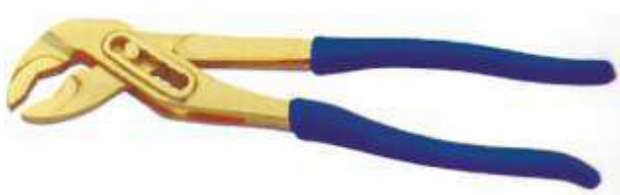

Ball pein hammer GRING

Al-Cu				Be-Cu			
Code	H g	L mm	WT g	Code	H g	L mm	WT g
17506001	230	280	403	**17606001**	230	280	507
17506002	340	280	502	**17606002**	340	280	610
17506003	450	310	680	**17606003**	450	310	730
17506004	680	340	880	**17606004**	680	340	911
17506005	910	350	1100	**17606005**	910	350	1220
17506006	1130	400	1470	**17606006**	1130	400	1615

Combination pliers GRING

Al-Cu			Be-Cu		
Code	L mm/Inch	WT g	Code	L mm/Inch	WT g
17301001	150/6"	230	**17401001**	150/6"	250
17301002	175/7"	330	**17401002**	175/7"	355
17301003	200/8"	375	**17401003**	200/8"	410
17301004	250/10"	500	**17401004**	250/10"	550

Diagonal cutting pliers GRING

Al-Cu			Be-Cu		
Code	*L mm/Inch*	*WT g*	*Code*	*L mm/Inch*	*WT g*
17302001	150/6"	200	**17402001**	150/6"	220
17302002	200/8"	365	**17402002**	200/8"	410

Long nose pliers GRING

Al-Cu			Be-Cu		
Code	*L mm/Inch*	*WT g*	*Code*	*L mm/Inch*	*WT g*
17303001	150/6"	170	**17403001**	150/6"	190
17303002	200/8"	300	**17403002**	200/8"	335

Gas pliers GRING

Al-Cu			Be-Cu		
Code	*L mm/Inch*	*WT g*	*Code*	*L mm/Inch*	*WT g*
17304001	200/8"	315	**17404001**	200/8"	350

Slotted screwdriver GRING

Al-Cu					Be-Cu				
Code	*SL*	*L mm*	*L1 mm*	*WT g*	*Code*	*SL*	*L mm*	*L1 mm*	*WT g*
17501001	3	134	50	33	**17601001**	3	134	50	35
17501002	4,5	134	50	40	**17601002**	4,5	134	50	43
17501003	3	159	75	32	**17601003**	3	159	75	35
17501004	4	159	75	42	**17601004**	4	159	75	45
17501005	5	180	75	65	**17601005**	5	180	75	70
17501006	4	184	100	42	**17601006**	4	184	100	45
17501007	5	205	100	70	**17601007**	5	205	100	75
17501008	6	215	100	80	**17601008**	6	215	100	85
17501009	6	240	125	95	**17601009**	6	240	125	100
17501010	6	265	150	105	**17601010**	6	265	150	110
17501011	7	265	150	120	**17601011**	7	265	150	125
17501012	8	277	150	135	**17601012**	8	277	150	140
17501013	8	327	200	155	**17601013**	8	327	200	165
17501014	9	377	250	175	**17601014**	9	377	250	185
17501015	11	377	250	245	**17601015**	11	377	250	260
17501016	10	427	300	230	**17601016**	10	427	300	245
17501017	11	427	300	275	**17601017**	11	427	300	290
17501018	11	477	350	300	**17601018**	11	477	350	320
17501019	12	550	400	430	**17601019**	12	550	400	450

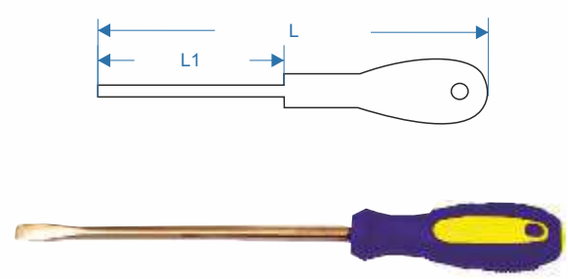

Phillips screwdriver GRING

Al-Cu					Be-Cu				
Code	*PH*	*L mm*	*L1 mm*	*WT g*	*Code*	*PH*	*L mm*	*L1 mm*	*WT g*
17502001	3	134	50	32	**17602001**	3	134	50	35
17502002	4	159	75	63	**17602002**	4	159	75	70
17502003	5	205	100	70	**17602003**	5	205	100	75
17502004	6	240	125	95	**17602004**	6	240	125	100
17502005		265	150	105	**17602005**		265	150	110
17502006	8	327	200	155	**17602006**	8	327	200	165
17502007		377	250	170	**17602007**		377	250	185
17502008	9	427	300	230	**17602008**	9	427	300	245
17502009		477	350	255	**17602009**		477	350	270
17502010		550	400	280	**17602010**		550	400	295
17502011		600	450	300	**17602011**		600	450	320

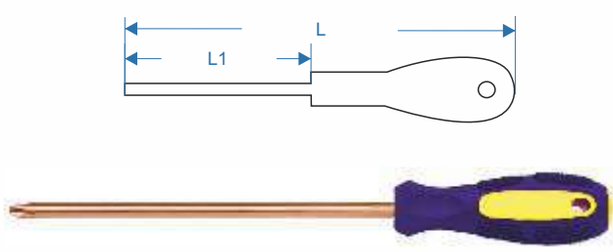

Punches GRING

Al-Cu					Be-Cu				
Code	L mm/Inch	Ø mm	Ø1 mm	WT g	Code	L mm/Inch	Ø mm	Ø1 mm	WT g
17504001	150/6"	5	11	95	17604001	150/6"	5	11	105
17504002	150/6"	6	12	115	17604002	150/6"	6	12	130
17504003	150/6"	7	13	135	17604003	150/6"	7	13	150
17504004	150/6"	8	14	150	17604004	150/6"	8	14	170
17504005	175/7"	10	16	230	17604005	175/7"	10	16	255
17504006	175/7"	12	18	300	17604006	175/7"	12	18	335
17504007	225/9"	13	29	1060	17604007	225/9"	13	29	1180

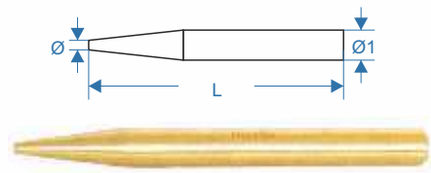

Al-Cu				Be-Cu			
Code	L mm/Inch	Ø mm	WT g	Code	L mm/Inch	Ø mm	WT g
17504101	100/4"	16	125	17604101	100/4"	16	145
17504102	150/6"		205	17604102	150/6"		230
17504103	200/8"	18	340	17604103	200/8"	18	392
17504104	300/12"		540	17604104	300/12"		615
17504105	400/16"		740	17604105	400/16"		820
17504106	500/20"	20	1102	17604106	500/20"	20	1230
17504107	500/20"	30	2480	17604107	500/20"	30	2740

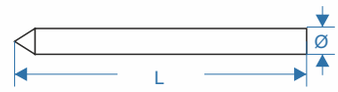

Chisel flat GRING

Al-Cu					Be-Cu				
Code	L mm/Inch	Ø mm	B mm	WT g	Code	L mm/Inch	Ø mm	B mm	WT g
17505001	160/6,4"	14	14	160	17605001	160/6,4"	14	14	175
17505002		16	16	210	17605002		16	16	231
17505003		18	18	271	17605003		18	18	295
17505004	200/8"			342	17605004	200/8"			382
17505005		20	20	430	17605005		20	20	473
17505006	250/10"	24	24	751	17605006	250/10"	24	24	822
17505007	300/12"			942	17605007	300/12"			1025
17505008		25	25	1002	17605008		25	25	1302
17505009	400/16"			1360	17605009	400/16"			1502
17505010	500/20"			1730	17605010	500/20"			1903
17505011		30	30	2481	17605011		30	30	2730

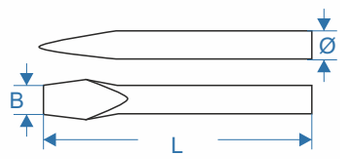

Chisel pneumatic al GRING

Al-Cu					Be-Cu				
Code	L mm/Inch	Ø mm	S mm	WT g	Code	L mm/Inch	Ø mm	S mm	WT g
17505101	125/5"	12	10	102	17605101	125/5"	12	10	117
17505102	175/7"			145	17605102	175/7"			168

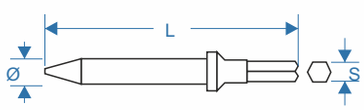

Al-Cu						Be-Cu					
Code	L mm/Inch	Ø mm	S mm	B mm	WT g	Code	L mm/Inch	Ø mm	S mm	B mm	WT g
17505201	125/5"	12	10	20	141	17605201	125/5"	12	10	20	160
17505202	175/7"				182	17605202	175/7"				210

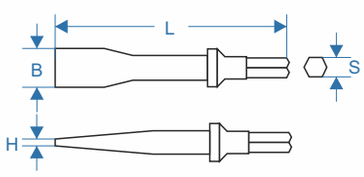

Choosing the right cylinder

Step 1: Select the hydraulic cylinder that best suits the application.
Step 2: Select the hydraulic pump that best matches the cylinder and application.
Step 3: Select the hydraulic accessories that you need.

Considerations:
1. What push or pull force is required per cylinder in your application? (Rule of thumb: Always choose a cylinder with a tonnage rating of 20% or more than what is required to lift the load.)
2. What is the push or pull stroke length required?
3. Does the cylinder need to push, pull or both?(Single acting cylinders extend the piston under hydraulic pressure; double-acting cylinders extend and retract the piston under hydraulic pressure)
4. Does the application require multiple cylinders?
5. Is the application stationary, or must the components be light in weight for easy portability?
6. Do you need to extend a rod or cable through the center of the cylinder for the application, as in a tensioning operation?
7. Does the application require that the cylinder fit within limited-clearance work areas?
8. Does the application require that the cylinder be "dead-ended" at the end of it's work stroke?
9. Will the cylinder need to withstand off-center loads? Cylinders with tilt saddles are available.
10. Does the application require that the lifted load be supported for extended periods of time? Cylinders with lock nuts are ideal for such jobs.
11. Is corrosion resistance required? Hydraulic cylinders have baked enamel finish for increased corrosion resistance.

What type of cylinder do you need?

1.To determine a cylinders force capacity	FORCE (kg)	=	Cylinder effective area (cm^2)	x	Pressure from Pump (bar)
2. To determine oil capacity of a cylinder	OIL CAPACITY (cm3)	=	Cylinder Effective Area (cm3)	x	Cylinder Stroke (cm)
3. To determine reservior capacity needed for a multiple cylinder system:	OIL CAPACITY (cm3)	=	Cylinder Effective Area (cm3)	x	Cylinder Stroke (cm)

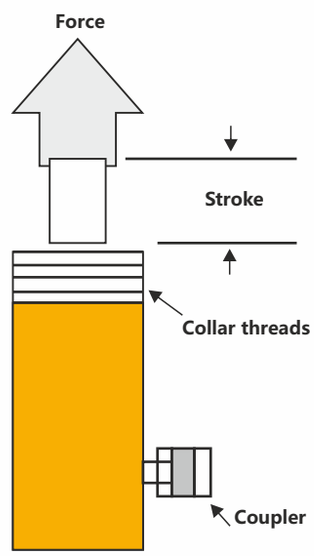

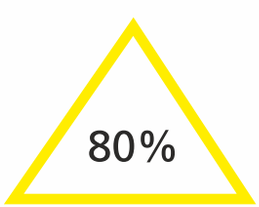

THINK SAFETY!
Manufacturer's rating of load and stroke are maximum safe limits. Good 80% practice encourages using only 80% of these ratings.

Single-acting general purpose cylinder GRING

Working pressure: 700 bar.

Designed for use in all positions. High strength alloy steel for durability. Chrome plated piston resists wear and corrosion. Dust wiper on piston rod reduces contamination. Baked enamel finish for increased corrosion resistance. All cylinders are proof tested to 125% of capacity before leaving our factory. 10-100 ton cylinder bores are roller burnished to harden the surface and make it smoother. 10-200 ton cylinder models are spring return, 250-1000 ton cylinder models are load return. Each cylinder has an GR-II 3/8" NPT male half coupler and dust cap. Each cylinder has a flat grooved saddle. Tilt saddle is available on request.

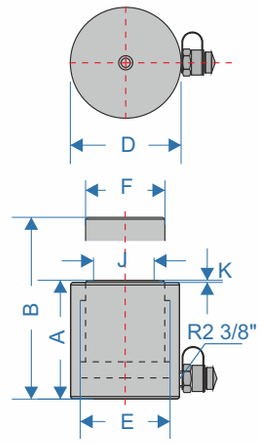

Code	Model	Cylinder capacity Ton	Cylinder capacity KN	Stroke mm	Effective area sm^2	Oil capacity sm^2	Closed height mm A	Extended height mm B	Ø outside mm D	Ø inside mm E	Ø Piston mm F	Standard saddle Ø mm J	Saddle prot. from plgr. mm K	Handle	Gross weight kg	Recommended pump
22501001	GRYG-1050	10	111	50	15.9	85	122	172	68	45	36	27.5	2	No	3,1	GRB-700C
22501002	GRYG-10100			100		169	172	272						Yes	4,4	
22501003	GRYG-10150			150		254	222	372							5,7	
22501004	GRYG-2050	20	198	50	28.3	157	126	176	83	60	45	37.5		No	4	
22501005	GRYG-20100			100		311	176	276						Yes	5,3	GRB-700
22501006	GRYG-20150			150		465	226	376							6,6	
22501007	GRYG-3050	30	309	50	44.2	237	137	187	103	75	65	48.5		No	7,9	GRB-700C
22501008	GRYG-30100			100		471	187	287						Yes	10,7	GRB-700
22501009	GRYG-30150			150		705	237	387							13,5	GRB-700A
22501010	GRYG-5050	50	496	50	70.8	389	147	197	123	95	70	57.5		No	11,6	GRB-700
22501011	GRYG-50100			100		768	197	297						Yes	14,9	GRB-700A
22501012	GRYG-50150			150		1147	247	397							18	
22501013	GRYG-10050	100	1077	50	1539	8333	182	232	178	140	100	83			25,7	
22501014	GRYG-100100			100		1584	232	332						Eye bolts	30,6	
22501015	GRYG-100150			150		2335	282	432							35,5	
22501016	GRYG-15050	150	1496	50	213.7	1133	182	232	205	165	115	89	4		43	
22501017	GRYG-150100			100		2237	232	332							53	
22501018	GRYG-150150			150		3342	282	432							63	GRB-630A
22501019	GRYG-20050	200	1984	50	283.4	1500	202	252	228	190	135	109			60	GRB-700A
22501020	GRYG-200100			100		2953	252	352							71	GRB-630A
22501021	GRYG-200150			150		4406	302	452							83	
22501022	GRYG-25050	250	2540	50	362.9	1815	248	298	270	215	180	16.3	1		105	
22501023	GRYG-250150			100		5446	348	498							142	
22501024	GRYG-250300			300		10892	498	798							196	
22501025	GRYG-30050	300	3165	50	452.2	2262	267	317	285	240	200	177			126	GRB-630A
22501026	GRYG-300150			100		6786	367	517							165	GRB-630M
22501027	GRYG-300300			300		13572	517	817							224	
22501028	GRYG-40050	400	4006	50	572.3	2863	315	365	325	270	220	198	2		195	
22501029	GRYG-400150			100		8588	415	565							245	
22501030	GRYG-400300			300		17177	565	865							318	
22501031	GRYG-50050	500	5111	50	730.2	3653	345	395	373	305	250	228			283	
22501032	GRYG-500150			100		10959	445	595							349	
22501033	GRYG-500300			300		21918	595	895							451	
22501034	GRYG-60050	600	5984	50	854.9	4276	371	421	402	330	270	247			354	
22501035	GRYG-60150			100		12829	471	621							431	
22501036	GRYG-600300			300		25659	621	921							546	
22501037	GRYG-80050	800	8358	50	1194	5973	424	474	472	390	320	293			560	
22501038	GRYG-800150			100		17919	524	674							665	
22501039	GRYG-800300			300		35838	674	974							825	
22501040	GRYG-100050	1000	10161	50	1451.5	7261	477	527	530	430	360	326			799	
22501041	GRYG-1000150			100		21783	577	727							937	
22501042	GRYG-1000300			300		43566	727	1027							1145	

See pages 115-118 recommended pump hydraulic pumps

Single-acting low height cylinder GRING

Compact, flat design for use in confined spaces. Single acting, spring return. High strength alloy steel for durability. Chrome plated piston resists wear and corrosion. Baked enamel finish for increased corrosion resistance. Grooved piston rods require no saddle. Mounting holes permit easy fixturing. Cylinder bores are roller burnished to harden the surface and make it smoother. Each cylinder has an GR-II 3/8" NPT male half coupler and dust cap.

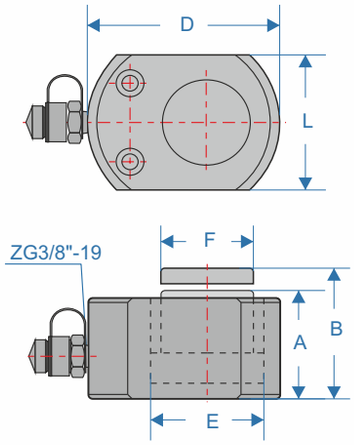

Working pressure: **700bar.**

All GRYG series cylinders require a solid lifting surface for correct support. Using cylinders on surfaces as sand, mud or dirt may result in cylinder damagel.

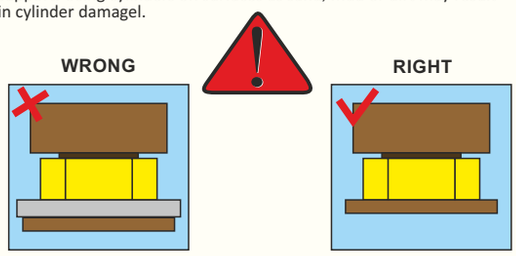

Rough soil

Flat lifting surface

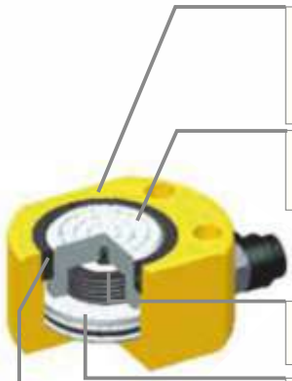

Stopping ring (to protect the cylinder when the stroke get to top, absorbing heaviness from the other side)

Principal axis (avoid axis break when it is overloading)

Spring (grovide the capability of quick flexing)

Brass ring (use high qualitty of brass to joint, to protect the status of overloading and absorb heaviness from the other size)

Cylinder wall and principal axis (Chrome plated to prevent corrosion and reduce friction)

Code	*Model*	*Cylinder capacity*		*Stroke mm*	*Effective area sm²*	*Oil capacity sm²*	*Closed height mm*	*Extended height mm*	*Ø outside mm*	*Øinside mm*	*ØPiston rod mm*	*Gross weight kg*	*Recommended pump*
		Ton	*KN*				*A*	*B*	*D*	*E*	*F*		
22501043	GRYG-5B	5	67	7	9,6	7	40	47	64x45	35	25	0,75	GRB-700C
22501044	GRYG-10B	10	111	10	15,9	16	48	58	83x60	45	38	1,6	
22501045	GRYG-20B	20	198	11	28,3	34	56	67	99x76	60	50	2,7	
22501046	GRYG-30B	30	309	13	44,2	55	62	75	123x98	75	55	4,6	
22501047	GRYG-50B	50	496	16	70,8	101	72	88	148x120	95	101	7,8	
22501048	GRYG-100B	100	1002		143,1	200	91	200	188x160	135	200	16,8	GRB-700
22501049	GRYG-150B	150	1496		213,7	342	100	342	215x190	165	342	27	

See pages 115-118 recommended pump hydraulic pumps

Double-acting general purpose cylinder GRING

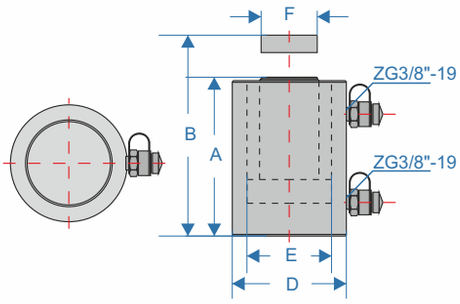

Working pressure: 700bar

Versatile, rugged cylinders for tough job site uses and high-cycle industrial uses

Double-acting for rapid piston retraction. High strength alloy steel for durability. Chrome plated piston resists wear and corrosion. Baked enamel finish for increased corrosion resistance. Dust wiper on piston rod reduces contamination. Grooved piston rods require no saddle. Each cylinder has two GR-II 3/8" NPT male half couplers and dust caps.

Pump Selection:
A double-acting cylinder must be powered by a two-way hydraulic pump.

Code	Model	Cylinder capacity Ton	Cylinder capacity KN	Cylinder capacity Pull(KN)	Stroke mm	Effective area sm² Push	Effective area sm² Pull	Oil capacity sm² Push	Oil capacity sm² Pull	Closed height mm A	Extended height mm B	Ø outside mm D	Ø inside mm E	Ø Piston rod mm F	Gross weight kg	Handle	Recommended pump
22501050	GRYG-10250S	10	137	70	250	19,6	10	491	250	380	630	70	50	35	10	No	GRB-630B -I
22501051	GRYG-10300S				300			589	300	430	730				11		
22501052	GRYG-20250S	20	198	110	250	28,3	15,7	707	393	390	640	80	60	40	13		
22501053	GRYG-20300S				300			848	491	440	740				15		
22501054	GRYG-30200S	30	309	172	200	44,2	24,6	884	492	364	564	95	75	50	17		
22501055	GRYG-30300S				300			1325	738	464	764				21		
22501056	GRYG-50200S	50	496	227	200	70,8	32,4	1418	648	374	574	120	95	70	29		
22501057	GRYG-50300S				300			2126	971	474	774				35		
22501058	GRYG-100200S	100	1002	557	200	143,1	79,5	2863	1590	389	589	175	135	90	60		
22501059	GRYG-100300S				300			4294	2384	489	789				73		
22501060	GRYG-20050S	200	1984	982	50	283,4	140,3	1418	702	217	267	228	190	135	63	Eye bolts	
22501061	GRYG-200150S				150			4253	2105	317	467				84		
22501062	GRYG-200300S				300			8506	4210	467	767				146		
22501063	GRYG-25050S	250	2540	760	50	362,9	108,5	1815	543	261	311	270	215	180	102		
22501064	GRYG-250150S				150			5446	1628	361	511				135		
22501065	GRYG-250300S				300			10892	3256	511	811				184		
22501066	GRYG-30050S	300	3165	967	50	452,2	138,2	2262	691	280	330	285	240	200	133		GRB-630B -III
22501067	GRYG-300150S				150			6786	1628	380	530				173		
22501068	GRYG-300300S				300			13572	3256	530	830				231		
22501069	GRYG-40050S	400	4006	1346	50	572,3	192,3	2863	962	341	391	325	270	220	211		
22501070	GRYG-400150S				150			8588	2885	441	591				262		
22501071	GRYG-400300S				300			17177	5770	591	891				336		
22501072	GRYG-50050S	500	5111	1677	50	730,2	239,6	3653	1198	376	426	372	305	250	309		
22501073	GRYG-500150S				150			10959	3594	476	626				360		
22501074	GRYG-500300S				300			21918	7189	626	926				460		
22501075	GRYG-60050S	600	5984	1978	50	854,9	282,6	4276	1413	397	447	402	330	270	381		
22501076	GRYG-600150S				150			12829	4239	497	647				458		
22501077	GRYG-600300S				300			25659	8478	647	947				575		
22501078	GRYG-80050S	800	8358	2731	50	1194	390,1	5973	1951	438	488	472	390	320	583		
22501079	GRYG-800150S				150			17919	5852	538	688				681		GRB-630B -III
22501080	GRYG-800300S				300			35838	11704	688	988				850		
22501081	GRYG-100050S	1000	10161	3039	50	1451,5	434,1	7261	2171	493	543	530	430	360	830		
22501082	GRYG-1000150S				150			21783	6512	593	743				970		
22501083	GRYG-1000300S				300			43566	13023	743	1043				1177		

See pages 115-118 recommended pump hydraulic pumps

General purpose telescopic cylinder GRING

For use where there is a minimum clearance for the insertion of cylinder and a very high lift is necessary. Single acting, load return. High strength alloy steel for durability. Chrome plated piston resists wear and corrosion. Baked enamel finish for increased corrosion resistance. Each cylinder has an GR-II 3/8" NPT male half coupler and dust cap. Each cylinder has a flat grooved saddle.

Working pressure: 700bar.

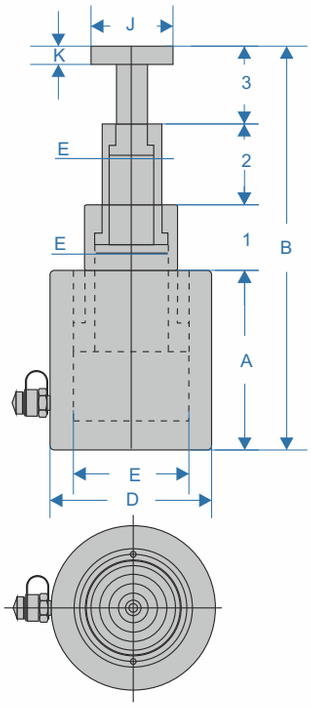

Code	Model	Cylinder capacity Ton	Stage	KN	Stroke mm	Stroke mm	Effective area sm²	Oil capacity sm²	Closed height mm A	Ø outside mm D	Øinside mm E	Ø standard saddle J	Saddle protr. from plgr. K	Gross weight kg	Handle	Recommended pump
22501084	GRYG-10270D	10	2	111	135	270	15,9	810	250	110	45	48	19	18	Eye bolts	GRB-700A
			1	309			44,2				75					
22501085	GRYG-10435D		3	111	145	435	15,9	2250	280	153	45	78		40		
			2	309			44,2				75					
			1	665			95				110					
22501086	GRYG-15300D	15	2	166	150	300	23,7	1308	280	125	55	63		28		
			1	445			63,6				90					
22501087	GRYG-15510D		3	166	170	510	23,7	3543	320	175	55	112		60		GRB-630A
			2	445			63,6				90					
			1	1002			143,1				135					
22501088	GRYG-30300D	30	2	309	150	300	44,2	2088	304	152	75	85	23	45		GRB-700A
			1	665			95				110					
22501089	GRYG-30600D		3	309	200	600	44,2	6803	366	220	75	142		106		GRB-630A
			2	665			95				110					
			1	1496			213,7				165					
22501090	GRYG-50300D	50	2	496	150	300	70,8	3800	350	170	95	105	29	68		
			1	1002			143,1				135					
22501091	GRYG-50600D		3	496	200	600	70,8	9500	390	230	95	160		152		
			2	1002			143,1				135					
			1	1984			283,4				190					

See pages 115-118 recommended pump hydraulic pumps

Low height telescopic cylinder GRING

For use in confined spaces: machinery positioning, tool fastening, etc. Single acting, load return. High strength alloy steel for durability. Baked enamel finish for increased corrosion resistance Cylinder bores are roller burnished to harden the surface and make it smoother. Grooved piston rods require no saddle. Mounting holes permit easy fixturing. Each cylinder has an GR-II 3/8" NPT male half coupler and dust cap.

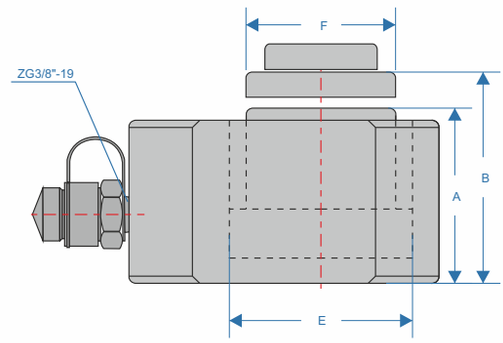

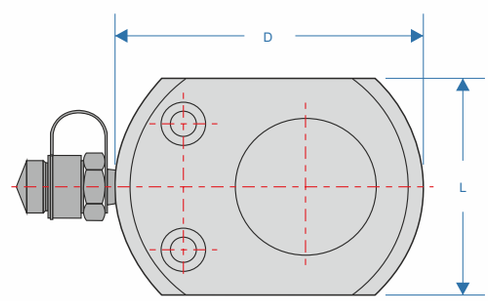

Working pressure: 700bar

Code	*Model*	*Cylinder capacity*			*Stroke mm*	*Stroke mm*	*Effective area sm²*	*Oil capacity sm²*	*Closed height mm*	*Extended height mm*	*Outside dia.*	*Øinside mm*	*ØPiston rod mm*	*Gross weight kg*	*Recommended pump*
		Ton	*Stage*	*KN*					*A*	*B*	*DxL*	*E*	*F*		
22501092	GRYG-10D	10	2	49	15	25	7	30	49	74	83x60	30	26	1,6	GRB-700C
			1	111	10		15,9					45	38		
22501093	GRYG-20D	20	2	67	16	27	9,6	51	57	84	99x76	35	31	2,7	
			1	198	11		28,3					60	50		
22501094	GRYG-30D	30	3	50	20	54	7,1	123	64	118	123x98	30	26	4,7	
			3	137	22		19,6					50	46		
			2	309	12		44,2					75	64		
22501095	GRYG-50D	50	3	50	25	66	7,1	188	74	140	148x120	30	26	7,9	
			2	137	26		19,6					50	46		
			1	496	15		70,8					95	70		
22501096	GRYG-100D	100	3	111	24	69	15,9	418	93	162	188x160	45	38	16,9	GRB-700
			2	309	30		44,2					75	69		
			1	1002	15		143,1					135	100		

See pages 115-118 recommended pump hydraulic pumps

1-2-acting Hollow Plunger Cylinder GRING

Hollow plunger design allows for both push and pull forces. 1-2-acting, spring return. High strength alloy steel for durability. Baked enamel finish for increased corrosion resistance. Each cylinder has an GR-II 3/8″ NPT male half coupler and dust cap.

1-acting Cylinder

Working pressure: 700bar

2-acting Cylinder

For use in Testing, Maintenance and Tensioning Applications

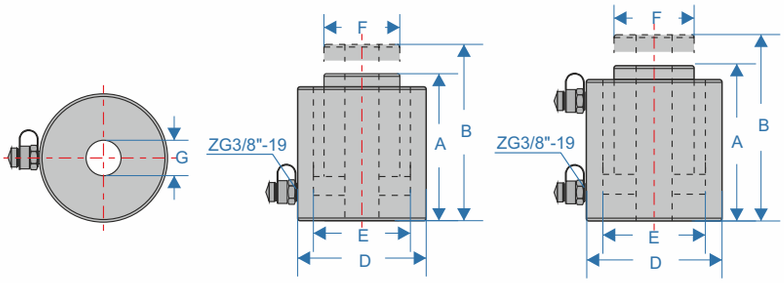

Pump Selection. A double-acting cylinder must be powered by a two-way hydraulic pump

1-acting cylinder

Code	Model	Cylinder capacity Ton	Cylinder capacity KN	Stroke mm	Effective area sm²	Oil capacity sm²	Closed height mm A	Extended height mm B	Outside dia. D	Centr hole mm G	Øinside mm E	ØPiston rod mm F	Gross weight kg	Handle	Recommended pump
22501097	GRYG-2050K	20	205	50	29,3	146	161	211	98	27	73	54	7,5	No	GRB-700
22501098	GRYG-20100K			100		292	223	323					10		
22501099	GRYG-3050K	30	334	50	47,7	239	180	230	114	33	90	63	9		
22501100	GRYG-3010K			100		477	247	297					30,2		
22501101	GRYG-6050K	60	562	50	80,3	402	246	346	158	54	123	91	14,5	Removable carrying handles	
22501102	GRYG-60100K			100		803	304	404					36,2		GRB-700A
22501103	GRYG-10075K	100	946	75	135,2	1015	276	351	212	80	165	127	57		

2-acting cylinder

Code	Model	Cylinder capacity Ton	Cylinder capacity Enter trace KN	Cylinder capacity Return trace KN	Stroke mm	Effective area sm² Enter trace	Effective area sm² Return trace	Oil capacity sm² Enter trace	Oil capacity sm² Return trace	Closed height mm A	Extended height mm B	Outside dia. D	Centr hole mm G	Øinside mm E	ØPiston rod mm F	Gross weight kg	Handle	Recommended pump
22501104	GRYG-6050KS	60	562	377	50	80,3	53,8	402	269	202	252	158	54	123	91	24,5	Removable carrying handles	GRB-700S
22501105	GRYG-10050KS				100			803	538	252	302					31,3		
22501106	GRYG-100100KS	100	965	642	50	137,8	91,7	689	459	207	257	212	80	166	126	44,7		
22501107	GRYG-15050KS				100			1379	917	257	307					56,6		
22501108	GRYG-150100KS	150	1495	909	50	213,5	129,9	1118	650	217	267	258	100	210	166	69,7		
22501109	GRYG-20050KS				100			2236	1299	267	317					87,2		GRB-630B
22501110	GRYG-60100KS	200	1929	1161	50	275,5	165,8	1436	829	237	287	288	120	240	191	90,9		
22501111	GRYG-200100KS				100			2873	1658	287	337					112		

See pages 115-118 recommended pump hydraulic pumps

Single-acting, lock nut cylinder GRING

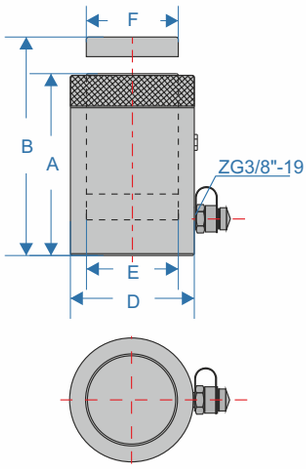

Safety lock nut for mechanical load holding. Sing-acting, 10-200 ton cylinder models are spring return, 250-1000 ton cylinder models are load return. Overflow port functions as a stroke limiter. High strength alloy steel for durability. Chrome plated piston resists wear and corrosion. Baked enamel finish for increased corrosion resistance. Each cylinder has an GR-II 3/8" NPT male half coupler and dust cap. Each cylinder has a flat grooved saddle. Tilt saddle is available on request.

Working pressure: 700bar

Code	Model	Cylinder capacity Ton	Cylinder capacity KN	Stroke mm	Effective area sm^2	Oil capacity sm^3	Closed height mm A	Extended height mm B	Outside dia. D	Øinside mm E	ØPiston rod mm F	Locknut height mm	Gross weight kg	Handle	Recommended pump
22501112	GRYG-1050LS			50		90	144	194					4	No	
22501113	GRYG-10100LS	10	111	100	15,9	171	194	294	68	45	45	28	5,5	Yes	
22501114	GRYG-10150LS			150		255	244	394					7		GRB-700C
22501115	GRYG-2050LS			50		168	148	198					7	No	
22501116	GRYG-20100LS	20	198	100	28,3	316	198	298	83	60	60	30	9		
22501117	GRYG-20150LS			150		467	248	398					11,2		GRB-700
22501118	GRYG-3050LS			50		248	156	206					9,5		GRB-700C
22501119	GRYG-30100LS	30	309	100	44,2	475	206	306	103	75	75	32	12,7	Yes	GRB-700
22501120	GRYG-30150LS			150		706	256	406					15,5		GRB-700A
22501121	GRYG-5050LS			50		406	164	214					14,5		GRB-700
22501122	GRYG-50100LS	50	496	100	70,8	773	214	314	123	95	95	36	19		
22501123	GRYG-50150LS			150		1147	264	414					23,5		
22501124	GRYG-10050LS			50		797	186	236					30,5		
22501125	GRYG-100100LS	100	1002	100	143,1	1548	236	336	168	135	135	44	39		GRB-700A
22501126	GRYG-100150LS			150		2299	286	436					47,5		
22501127	GRYG-15050LS			50		1168	209	259					54		
22501128	GRYG-150100LS	150	1496	100	213,7	2273	259	359	208	165	165	44	66,5		
22501129	GRYG-150150LS			150		3377	309	459					79,5		
22501130	GRYG-20050LS			50		1502	243	293					80,5		
22501131	GRYG-200100LS	200	1984	100	283,4	2955	293	393	238	190	190	50	97,5		GRB-630A
22501132	GRYG-200150LS			150		4408	343	493					113,5		
22501133	GRYG-25050LS			50		1900	249	299					115		
22501134	GRYG-250150LS	250	2540	150	362,9	5566	349	499	275	215	215	56	163		
22501135	GRYG-250300LS			300		11047	499	799					233		
22501136	GRYG-30050LS			50		2262	276	326					136		
22501137	GRYG-300150LS	300	3165	150	452,2	6786	376	526	285	240	240	60	185	Eye bolts	
22501138	GRYG-300300LS			300		13572	526	826					258		
22501139	GRYG-40050LS			50		2863	321	371					207		
22501140	GRYG-400150LS	400	4006	150	272,3	8588	421	571	325	270	270	70	270		
22501141	GRYG-400300LS			300		17177	571	871					366		
22501142	GRYG-50050LS			50		3653	356	406					301		
22501143	GRYG-500150LS	500	5111	150	730,2	10959	456	606	372	305	305	80	385		
22501144	GRYG-500300LS			300		21918	606	906					511		GRB-630M
22501145	GRYG-60050LS			50		4276	376	426					370		
22501146	GRYG-600150LS	600	5984	150	854,9	12829	476	626	402	330	330	85	470		
22501147	GRYG-600300LS			300		25659	626	926					616		
22501148	GRYG-80050LS			50		5973	441	491					603		
22501149	GRYG-800150LS	800	8358	150	1194	17919	541	691	472	390	390	100	736		
22501150	GRYG-800300LS			300		35838	691	991					941		
22501151	GRYG-100050LS			50		7261	491	541					847		
22501152	GRYG-1000150LS	1000	10161	150	1451,5	21783	591	741	530	430	430	110	1017		
22501153	GRYG-1000300LS			300		43566	741	1041					1273		

See pages 115-118 recommended pump hydraulic pumps

Single-acting aluminum cylinder GRING

Lightweight for maxium portability.
Hard-coat finish on all
surfaces resists damage and extends cylinder lift.
Single acting, spring return.
Each cylinder has an GR-II 3/8″ NPT male half
coupler and dust cap.
Each cylinder has a flat grooved saddle.
Tilt saddle is available on request.

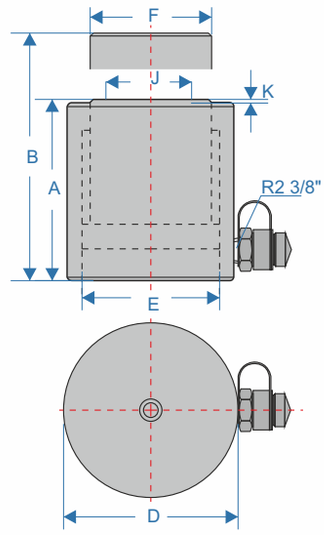

Working pressure: 700bar

Code	Model	Cylinder capacity Ton	Cylinder capacity KN	Stroke mm	Effective area sm²	Oil capacity sm²	Closed height mm A	Extended height mm B	Ø Outside dia. D	Øinside mm E	ØPiston rod mm F	Saddle size mm G	Saddle size mm K	Saddle size mm L	Gross weight kg	Handle	Recommended pump
22501154	GRYG-1050L	10	111	50	15,9	85	142	192	60	45	45	30	14	15	1,2	No	GRB-700C
22501155	GRYG-10100L			100		169	192	292							1,7		
22501156	GRYG-10150L			150		254	242	392							2,1		
22501157	GRYG-2050L	20	198	50	28,3	157	162	212	85	60	60	41	16	18	3		
22501158	GRYG-20100L			100		311	212	312							3,8		GRB-700
22501159	GRYG-150L			150		465	262	412							4,6		
22501160	GRYG-3050L	30	309	50	44,2	240	172	222	110	75	75	49			5,1		GRB-700C
22501161	GRYG-30100L			100		474	222	322							6,4		GRB-700
22501162	GRYG-30150			150		707	272	422							7,6		GRB-700A
22501163	GRYG-5050L	50	496	50	70,8	391	182	232	140	95	95	67	18	20	8,6		GRB-700
22501164	GRYG-50100L			100		770	323	332							10,5		GRB-700A
22501165	GRYG-50150L			150		1149	282	432							12,5		
22501166	GRYG-10050L	100	1002	50	143,1	783	208	258	180	135	135	99	18		17		
22501167	GRYG-100100L			100		1534	258	358							20,5	Eye bolts	
22501168	GRYG-100150			150		2285	308	458							23,3		
22501169	GRYG-15050L	150	1496	50	213,7	1136	233	283	230	165	165	114	21		30,9		
22501170	GRYG-150100L			100		2241	283	383							35,9		
22501171	GRYG-150150L			150		3345	333	483							40,9		GRB-630A
22501172	GRYG-20050L	200	1984	50	283.4	1485	263	313	270	190	190	139	22	20	47,5		GRB-700A
22501173	GRYG-200100L			100		2938	313	413							51,6		GRB-630A
22501174	GRYG-200150L			150		4391	363	513							61,2		
22501175	GRYG-200200L			200		5844	413	613							68		
22501176	GRYG-200250L			250		7897	463	713							74,8		

See pages 115-118 recommended pump hydraulic pumps

Hydraulic toe jack GRING

Quick, simple and effortless operation by hand. Lifting points on toe and head provides added versatility. The toe structural part is made of alloy steel and casted from a mold without welding or bending process, which materializes great strength and durability. Low height lifting toe allows working in confined areas. High strength return spring enables rapid ram retraction. Swiveling pump handle assembly allows the operator to access and pump the unit from numerous positions. Built-in safety valve prevents overpressurization. Internal overflow valve functions as a stroke limiter. Convenient carry handle.

Code	Model	Cylinder capacity		Stroke mm	Closed height mm	Toe clerance mm	Gross weight kg	Packing size mm
		Toe	Head					
22501177	GRQD-5	2,5	5	120	222	16	14,2	300×200x320
22501178	GRQD-10	5	10	150	265	18	20,7	330x220x320
22501179	GRQD-20	10	20	160	285	20	31	350x240x320
22501180	GRQD-30	15	30	160	305	20	46,4	380x270x340

Air hydraulic toe jack Gring

Air Hydraulic Toe Jacks are ideal for lifting applications where an air compressor is available.

Code	Model	Cylinder capacity		Air pressure	Stroke mm	Closed height mm	Toe clerance mm	Gross weight kg	Packing size mm
		Toe	Head						
22501181	GRQD-5	2,5	5	8/120	120	222	16	15	300×200x310
22501182	GRQD-10	5	10		150	265	18	21,6	330x220x310
22501183	GRQD-20	10	20		160	285	20	32,2	350x240x320
22501184	GRQD-30	15	30		160	305	20	47,2	380x270x340

Manual hydraulic pipe bender GRING

1. Ergonomic handle reduces operator fatigue
2. Vented oil plug
3. Easy release knob
4. Light weight aluminum cylinder
5. Steady tripod stand

Code	Model	Hydraulic Ram output Ton	Ram stroke mm	Bending range(O.D.) mm	Bending shoes inch	Gross weight kg	Packing size mm
22501185	GRW-2C	13	250	Ø 21,3 - Ø 60	1/2", 3/4", 1", 1¼", 1½", 2"	47,3	73x32x20
22501186	GRW-3C	20	290	Ø 21,3 - Ø 88,5	1/2", 3/4", 1", 1¼", 1½", 2", 2½", 3"	95	92x34x22

Manual hydraulic pipe benders GRING

1. Vented oil plug.
2. Easy and simple operation. Fast piston return by turning the release knob anticlockwise.
3. High efficiency. Two-speed, heavy duty, low-maintenance hydraulic system.
4. Heavy duty casters provide mobility.
5. Precision bend forming.

Code	Model	Hydraulic Ram output Ton	Ram stroke mm	Bending range(O.D.) mm	Bending shoes inch	Gross weight kg	Packing size mm
22501187	GRW-2	13	250	Ø 21,3 - Ø 60	1/2", 3/4", 1", 1¼", 1½", 2"	53	73x32x20
22501188	GRW-3	20	290	Ø 21,3 - Ø 88,5	1/2", 3/4", 1", 1¼", 1½", 2", 2½", 3"	117	92x34x22
22501189	GRW-4	20	370	Ø 21,3 - Ø 108	1/2", 3/4", 1", 1¼", 1½", 2", 2½", 3", 4"	155	118x46x25

Electric Hydraulic Pipe Benders GRING

1. Manual valve
2. Oil return hose
3. High pressure hose 1,5 m
4. Release knob
5. Heavy duty casters provide mobility
6. Precision bend forming

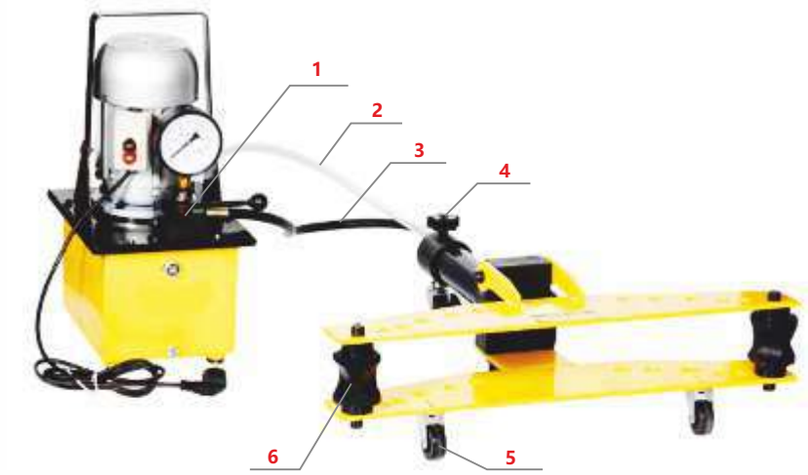

Code	Model	Hydraulic Ram output Ton	Ram stroke mm	Bending range(O.D.) mm	Bending shoes inch	Gross weight kg	Packing size mm
22501190	GRW-2D	13	250	Ø 21,3 - Ø 60	1/2", 3/4", 1", 1¼", 1½", 2"	66,9	96x35x28
22501191	GRW-3D	20	290	Ø 21,3 - Ø 88,5	1/2", 3/4", 1", 1¼", 1½", 2", 2½", 3"	120,8	118x46x29
22501192	GRW-4D	20	370	Ø 21,3 - Ø 108	1/2", 3/4", 1", 1¼", 1½", 2", 2½", 3", 4"	163,8	118x46x33

Bending shoes GRING

For bending pipes to 900 following GB/T 3091,DIN 2440,EN 10255,BS1387 standards. Made of nodular cast iron, the bending shoes are strong and durable.

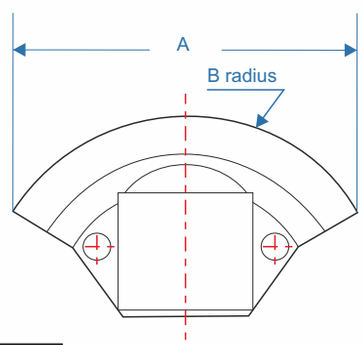

Code	Bending shoe size inch	A mm	B mm	D mm	Minimum bend radius mm	Pipe Schedule	Wall thickness mm
22501431	1/2"	115	67,5	22	50,2	40	2,8
						80	3,7
22501432	3/4"	131	84,5	28	66	40	2,9
						80	3,9
22501433	1"	147	96,5	34	75,4	40	3,4
						80	4,5
22501434	1¼"	195	134	43	108,7	40	3,6
22501435	1½"	242	162	50	133,5		3,7
22501436	2"	297	238	62	199,2		3,9
22501437	2½"	380	257	79	209		5,2
22501438	3"	436	390	90	335		5,5
22501439	4"	555	450	110	400		6

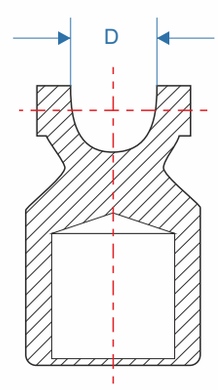

Square drive hydraulic torque wrench GRING

Constantly repeated accuracy ±3% across the full stroke. 360°×180° multi-positional swivel quick release couplings. Easy replaceable square and hexagon drive adapters. Body shroud engraved with torque pressure chart. Suitable for continuous operation at maximum pressure. High resistance with aluminium-titanium and light body. 360° adjustable reaction arm with safety lock feature.

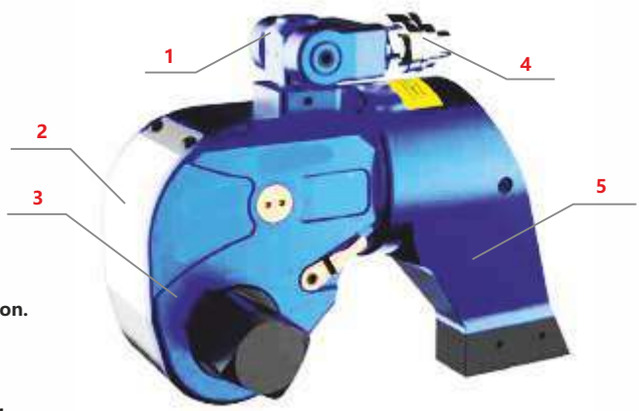

1. The 360*180 degree swivel is free to operation with no space limitation.
2. Laser with the pressure-torque table enables convenient operation.
3. Compact design with the raw material of advanced aluminum-titanium alloy, which intensifies the strength and toughness of the fuselage comprehensively.
4. The new locking coupler ensures the oil keep free access.
5. The reaction arm with 360° degree trimming style allows placing in any support point.
6. Drive unit.
7. Reaction arm.
8. Square drive adaptor.
9. Hexagon socket (optional).

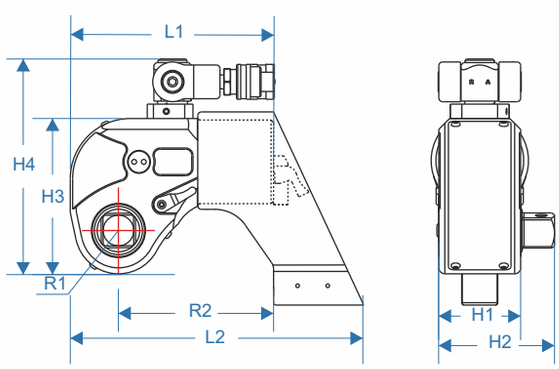

Max working pressure: 700 bar
Aluminum-titanium alloy material, compact structure.
Conventional high power torque wrench.

Code	Model	Square drive inch	Torque		Bolt size		Dimensions mm							
			Min	Max	Min	Max	L1	L2	H1	H2	H3	H4	R1	R2
22501206	GRBS-3	1"	451	4512	M22	M48	169	242	68	95	127	176.5	34	134
22501207	GRBS-5	1½"	752	7528	M27	M56	202.5	283.5	80	123	149	198.5	39	152
22501208	GRBS-8		1078	10780	M30	M64	216	309	90	134	167	216.5	47	171
22501209	GRBS-10		1551	15516	M36	M72	237.5	340.5	100	142	182	231.5	51	174
22501210	GRBS-20	2½"	2666	26664	M42	M90	299.5	466.5	120	183	220	269.5	59	250.5
22501211	GRBS-25		3472	34725	M48	M100	313	461	137	200	247	296.5	66	250.5
22501212	GRBS-35		4866	48666	M64	M120	45	496.5	153	216	282	331.5	77	271

Low profile hydraulic torque wrench GRING

700 bar maximum operation pressure.
Repeatability ±3% 4 different models from 230 Nm to 18,500 Nm.
Designed for tighten and loosen high torque applications.
360°×180° uni swivel quick release couplings.
Maximum torque power with minimum wall thickness.
Various cassettes, adaptors and reducers are available.
Durable structure, aluminium-titanium alloy and light body.
Suitable for continuous operations at maximum pressure.
Pressure relief valve prevents over pressure.

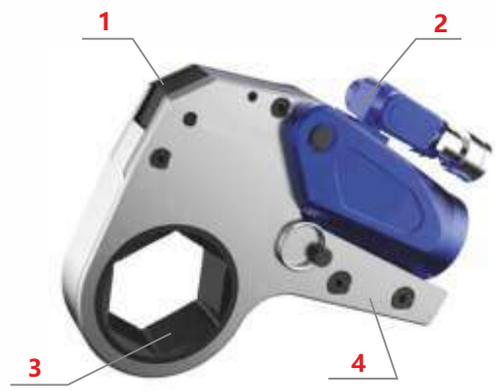

1. The reaction pawl officially overcome the possibility of ratchet reversing opposite, enhance the efficiency and precision of torque.
2. 360*180 degree swivel or 360*360 degree swivel allow the wrench free to operation with no space limitation.
3. More accuracy and easier when the wrench direct operate on the nuts.
4. Compact design with longer arm fully advances the reliability.
5. Hexagonal Cassette.
6. Drive unit (one drive unit accepts various cassettes).
7. Reducer insert (optional).
8. Lock pin.

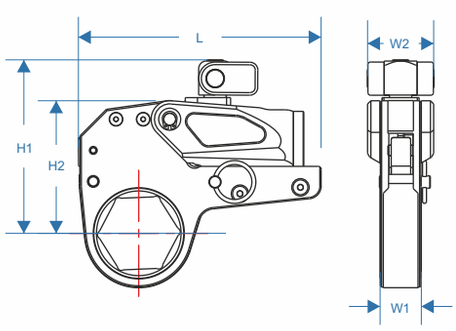

Low profile design fit in restricted access areas.Drive Unit made of aluminum-titanium alloy. Replaceable hexagon cassette.

Code	*Model*	*Torque*		*Hexagon nut A/F mm*	*Weight of drive unit kg*	*Weight of hexagon cassette kg*	*Dimensions mm*				
		Min	*Max*				*L1*	*H1*	*H2*	*W1*	*W2*
22501213	GRBS-K2	232	2328	19 ~ 55	1	1,6	196,4	125,9	102,3	32	51
		241	2414	60		1,7	196,4	128,5	105		
22501214	GRBS-K4	585	5858	34 ~ 65	2	4,4	245	177	135,7	42	66
		647	6474	70 ~ 80		4,6	246	187	145,7		
22501215	GRBS-K8	1094	10941	41 ~ 95	3,3	8	300	207	169	53	83
		1177	11774	100 ~ 105		8,4	301	216	178		
22501216	GRBS-K14	1852	18521	50 ~ 117	5,5	11,6	361	239	204	64	99

Hexagon cassettes for low profile hydraulic torque wrenches GRING

Every model of low profile hydraulic torque wrench has a choice of cassettes that cover all nut sizes.
Before ordering a hexagon cassette, it is important to consider the nut-to-nut or nut-to wall distance. Please make sure is big enough to accept the cassette.
The value of R and A in below diagram can help you to select the right cassette.

Reducer inserts are designed to work with hexagon cassettes. One cassette with various reducer inserts greatly increase the adaptability.

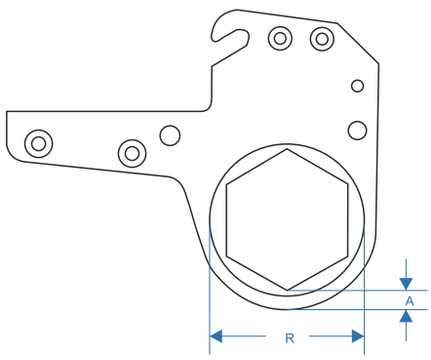

Reducer inserts

Reducer inserts are designed to work with hexagon cassettes. One cassette with various reducer inserts greatly increase the adaptability.

Hexagon cassette for GRBS-K2

Code	Model	R mm	A mm	Max torque
22501217	K219	27	16	2328
22501218	K222		14	
22501219	K227		11	
22501220	K230	29	12	
22501221	K232		11	
22501222	K243			
22501223	K236	31	10	
22501224	K241	34		
22501225	K246	37		
22501226	K250	40	11	
22501227	K255	43		
22501228	K260	46		2414

Hexagon cassette for GRBS-K4

Code	Model	R mm	A mm	Max torque
22501229	K434	36	16	5858
22501230	K436		15	
22501231	K441	39		
22501232	K446	42		
22501233	K450	44		
22501234	K455	46	14	
22501235	K460	50	15	
22501236	K465	53		
22501237	K470	56		6474
22501238	K475	59		
22501239	K480	61		

Hexagon cassette for GRBS-K8

Code	Model	R mm	A mm	Max torque
22501240	K841	46	22	10941
22501241	K846		19	
22501242	K850		17	
22501243	K855	50	18	
22501244	K860	52	17	
22501245	K865	55		
22501246	K870	58		
22501247	K875	60		
22501248	K880	63	16	
22501249	K885	66		
22501250	K890	69	17	
22501251	K895	71	16	
22501252	K8100	75	17	11774
22501253	K8105	78		

Hexagon cassette for GRBS-K14

Code	Model	R mm	A mm	Max torque
22501254	K1450	60	31	18521
22501255	K1455		28	
22501256	K1460		25	
22501257	K1465		22	
22501258	K1470		19	
22501259	K1475	63		
22501260	K1480	66		
22501261	K1485	69		
22501262	K1490	72	20	
22501263	K1495	74	19	
22501264	K14100	77		
22501265	K14105	80		
22501266	K14110	83		
22501267	K14115	87	20	
22501268	K14117		19	

High strength reducer inserts GRING

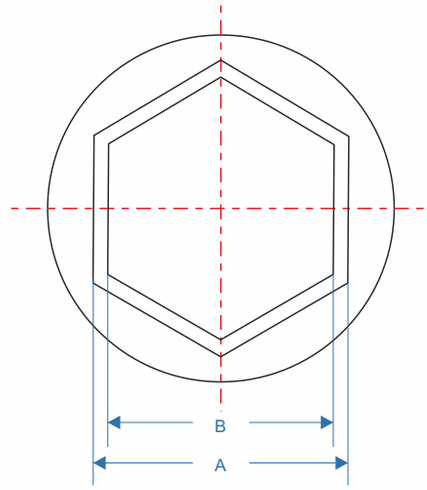

Standard reducer inserts selection chart

Model	*Hexagon cassette*	*Edge* (S)	*Reducer Inserts*									*Lock Ring*
	Model		*Code*	*Model*	*AxB mm*	*Code*	*Model*	*AxB mm*	*Code*	*Model*	*AxB mm*	
GRBS-K2	K250	50	**22501269**	K25041	50x41	**22501298**	K25036	50x36	**22501325**	K25032	50x32	SH-50
	K246	46	**22501270**	K24636	46x36	**22501299**	K24632	46x32	**22501326**	K24630	46x30	SH-46
	K241	41	**22501271**	K24132	41x32	**22501300**	K24130	41x30	**22501327**	K24127	41x27	SH-41
	K236	36	**22501272**	K23630	36x30	**22501301**	K23627	36x27				SH-36
	K232	32	**22501273**	K23227	32x27							SH-32
GRBS-K4	K465	65	**22501274**	K46555	65x55	**22501302**	K46550	65x50	**22501328**	K46546	65x46	SH-56
	K460	60	**22501275**	K46050	60x50	**22501303**	K46046	60x46	**22501329**	K46041	60x41	SH-60
	K455	55	**22501276**	K45546	55x46	**22501304**	K56641	55x41	**22501330**	K45536	55x36	SH-55
	K450	50	**22501277**	K45041	50x41	**22501305**	K45036	50x36	**22501331**	K45032	50x32	SH-50
	K446	46	**22501278**	K44636	46x36	**22501306**	K44632	46x32	**22501332**	K44630	46x30	SH-46
	K441	41	**22501279**	K44132	41x32	**22501307**	K44130	41x30	**22501333**	K44127	41x27	SH-41
	K436	36	**22501280**	K43630	36x30	**22501308**	K43627	36x27				SH-36
GRBS-K8	K8-90	90	**22501281**	K89080	90x80	**22501309**	K89075	90x75	**22501334**	K89070	90x70	SH-90
	K8-85	85	**22501282**	K88575	85x75	**22501310**	K88570	85x70	**22501335**	K88565	85x65	SH-85
	K8-80	80	**22501283**	K88070	80x70	**22501311**	K88065	80x65	**22501336**	K88060	80x60	SH-80
	K8-75	75	**22501284**	K87565	75x65	**22501312**	K87560	75x60	**22501337**	K87555	75x55	SH-75
	K8-70	70	**22501285**	K87060	70x60	**22501313**	K87055	70x55	**22501338**	K87050	70x50	SH-70
	K8-65	65	**22501286**	K86555	65x55	**22501314**	K86550	65x50	**22501339**	K86545	65x45	SH-65
	K8-60	60	**22501287**	K86050	60x50	**22501315**	K56046	60x46				SH-60
	K8-55	55	**22501288**	K85546	55x46	**22501316**	K85541	55x41				SH-55
GRBS-K14	K14115	115	**22501289**	K14115105	115x105	**22501317**	K14115100	115x100	**22501340**	K1411595	115x95	SH-115
	K14110	110	**22501290**	K14110100	110x100	**22501318**	K1411095	110x95	**22501341**	K1411090	110x90	SH-110
	K14105	105	**22501291**	K1410595	105x95	**22501319**	K1410590	105x90	**22501342**	K1410585	105x85	SH-105
	K14100	100	**22501292**	K1410090	100x90	**22501320**	K4140085	100x85	**22501343**	K1410080	100x80	SH-100
	K1495	95	**22501293**	K149585	95x85	**22501321**	K149580	95x80	**22501344**	K149575	95x75	SH-95
	K1490	90	**22501294**	K149080	90x80	**22501322**	K149075	90x75	**22501345**	K149070	90x70	SH-90
	K1485	85	**22501295**	K148575	85x75	**22501323**	K148570	85x70	**22501346**	K148565	85x65	SH-85
	K1480	80	**22501296**	K148070	80x70	**22501324**	K148065	80x65				SH-80
	K1475	75	**22501297**	K147565	75x65							SH-75

The choosing of hydraulic torque wrench GRING

This is Germany standard (DIN) above, the figure in the form is the max torque of the bolt, and the recommended torque is 80% of chart figure.
The recommended tightening torque equals the figure in the form* (80~90%).
For instance: M52, strength grade is 8.8,the torque is 4704 * 90% = 4233.6 N.m.
It is recommended that loosening torque equals about 150% of tighting torque.
For instance, the tightening torque is 4233.6 * (1.5~2) = 6350.4~8467.2 N.m

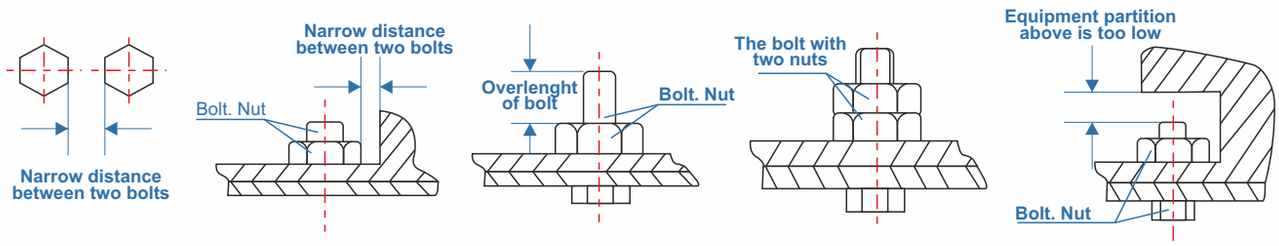

If you meet the above conditions, the square driven Torque Wrench cannot be used., you may use the Low Profile Wrench.

Minmum breaking strength		4.8		6.8		8.8		10.9		12.9	
		392Mpa		588Mpa		784Mpa		941 Mpa		1176Mpa	
Material		Q235(SS41)		35(S35C)		35CrMo(SCM3)		42CMo(SCM4)		40GrNiMoA(SNCM)	
Bolt m	*Diameter mm*	*Torque*									
		KGM	N.M.	KGM	N.M.	KGM	N.M.	KGM	N.M.	KGM	N.M.
14	22	7	69	10	98	14	137	17	165	23	225
16	24	10	98	14	137	21	206	23	247	36	363
18	27	14	137	21	206	39	284	35	341	49	480
20	30	18	176	28	296	41	402	58	569	69	680
22	32	23	225	34	333	55	539	78	765	93	911
24	36	32	314	48	470	70	686	100	981	120	1176
27	41	45	441	65	637	105	1029	150	1472	180	1764
30	46	60	588	90	882	125	1225	200	1962	240	2352
33	50	75	735	115	1127	150	1470	210	2060	250	2450
36	55	100	980	150	1470	180	1764	250	2453	300	2940
39	60	120	1176	180	1764	220	2156	300	2943	370	3626
42	65	155	1519	240	2352	280	2744	390	3826	470	4606
45	70	180	1764	280	2744	320	3136	450	4415	550	5390
48	75	230	2254	350	3430	400	3920	570	5592	680	6664
52	80	280	2744	420	4116	480	4704	670	6573	850	8330
56	85	360	3528	530	5149	610	5978	860	8437	1050	10290
60	90	410	4018	610	5978	790	7742	1100	10791	1350	13230
64	95	510	4998	760	7448	900	8820				
68	100	580	5684	870	8526	1100	10780				
72	105	660	6468	1000	9500	1290	12642				
76	110	750	7350	1100	10780	1500	14701				
80	115	830	8143	1250	12250	1850	18130				
85	120	900	8820	1400	13720	2250	22050				
90	130	1080	10584	1650	16170	2500	24500				
100	145	1400	13720	2050	20090						
110	155	1670	16366	2550	24990						
120	175	2030	19894	3050	29890						

Electric hydraulic torque wrench pump GRING

Compact 3-stage pump for operation with hydraulic wrenches.
One pump drives two hydraulic wrenches (standard setup).
Aluminum tank and oil level indicator.
Oil cooler for continous operation
Infinitely variable
pressure adjustment between 40-800 bar.

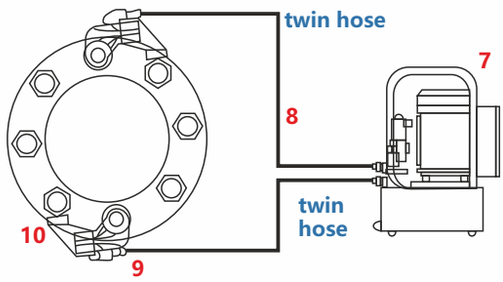

1. Aluminum frame for easy carrying and protecting the elements.
2. External pressure adjustor. Built-in pressure relief valve.
3. Long hose enables remote control.
4. Oil cooler permits 24 hours' uninterrupted running.
5. Aluminum tank for reduced weightand added portability.
6. Oil level indicator.
7. Hydraulic torque wrench pump.
8. Hydraulic twin hose.
9. Quick couplings (male + female).
10. Hydraulic wrench.

Max working pressure 700bar.

Code	*Model*	*Power rating KW*	*Flow at low pressure stage L/min*	*Flow at high pressure stage L/min*	*Voltage V*	*Frequency hz*	*Oil capacity l*	*Packing size mm*	*G.W kg*
22501347	GRB-6L	1.3	8	1.1	220	50	6	400x550 x500	30

Hand Operated Hydraulic Crimping Tools GRING

Code	Model	Hydraulic ram output Ton	Ram stroke mm	Crimping dies mm²	Crimping range mm²	G.W kg	Packing size mm
22501350	GRY-300A	9	18	16, 25, 35, 50, 70, 95, 120, 150, 185, 240, 300	10-300	14,5	610x210x110

Hand Operated Hydraulic Crimping Tools GRING

Designed for the electrical contractor and electric utility lineman who is confronted with larger cable diameter and larger connectors.

1. Wide open C crimping head, rotatting 180 degree.
2. Built-in pressure relief valve for overload protection.
3. Twist handle pressure release.
4. Insulated rubber sheath.
5. Fiberglass handles.

Code	Model	Hydraulic ram output Ton	Ram stroke mm	Crimping dies mm²	Crimp pattern	Crimping range mm²	G.W kg	Packing size mm
22501412	HHY-510	11	38	16, 25, 35, 50, 70, 95, 120, 150, 185, 240, 300, 400	Hexagonal type	16-400	11,9	770x230x130

Cordless radial press GRING

Pressing jaws confirm to standard GB/T 19228. Pressing stainless steel fittings up to 54 mm. Two-stage hydraulic system features fast feed and power stroke upon reaching counter pressure, saving time. 10000+ cycle service life. Ram retracts to original position automatically when operation is complete. Manual retraction in case of need. Audible buzzer and red LED light in case of error. Quick motor stop for higher user safety. Powerful 18V Li-ion battery with low battery warning. Ergonomic 2-component grip area and balanced center of gravity. Sturdy plastic storage box.

1. 350° rotatable jaw fixture.
2. Audible buzzer and red LED in case of error.
3. One button operation.
4. Manual retraction in case of need.
5. Ergonomic 2-component grip area and balanced center of gravit
6. High performance 18V Li-Ion battery

For pressing stainless steel. Reliable and watertight press j

Code	*Model*	*Hydraulic ram output Ton*	*Ram stroke mm*	*Application*	*Mould type*	*Pressing jaws*	*Weight kg*	*Packing size mm*
22501193	GRYD-1550	5	35	Pressing jaws pressing copper pipe, SS pipe, multiplayer composite pipe, PEX pipe	round	DN 15, DN 20, DN 25, DN 32, DN 40, DN 50	27	585x500x170

Hydraulic Radial press GRING

Pressing jaws confirm to standard GB/T 19228. Pressing stainless steel fittings up to 54 mm. Each tool head has an 3/8" quick coupling and dust cap. Requires an external hydraulic pump with rated oil pressure of 700 bar (10,000 psi).

1. 360° rotatable jaw fixture.
2. Handle lock knob.
3. Aluminum pump lever.
4. Manual release.
5. Aluminum pump housing.

For press jointing of stainless steel pipes DN 15-DN 50. Reliable and watertight press jointing.

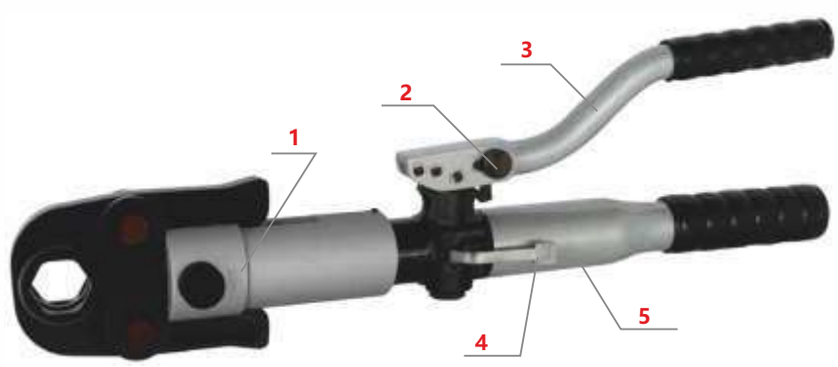

Code	*Model*	*Hydraulic ram output Ton*	*Ram stroke mm*	*Application*	*Mould type*	*Pressing jaws*	*Weight kg*	*Packing size mm*
22501194	GRF-1550	6,5	35	Pressing jaws pressing copper pipe, SS pipe, multiplayer composite pipe, PEX pipe	round	DN 15, DN 20, DN 25, DN 32, DN 40, DN 50	28	680x420x145

Hand-operated hydraulic cable cutter GRING

Characteristics:
Closed cutting head with bolt interlock, rotatable, flip top style. Two-stage hydraulic system features fast feed and power. Stroke upon reaching counter pressure, saving time. 10000 + cycle service life. Press manual reset button to retract the ram when cutting is complete. Press manual reset button to retract the ram in case of error. Ram retracts to original position automatically when applied force exceeds rated capacity. Audible buzzer and red LED light in case of error. Quick motor stop for higher user safety. Powerful 18V Li-ion battery with low battery warning. Ergonomic 2-component grip area and balanced center of gravity. Sturdy plastic storage box.

1. Closed cutting head with bolt interlock, rotatable, flip top style.
2. One-button operation.
3. Ergonomic 2-component grip area and balanced center of gravity.
4. Audible buzzer and red LED light in case of error
5. Manual reset button allows instant stop.
6. High performance 18V Li-Ion battery.

Code	Model	Hydraulic ram output Ton	Ram stroke mm	Battery capacity	Cutting range mm	Battery	Weight kg	Packing size mm
22501351	GRYD-50A	5	35	70 cutting cycles	ø 50 Copper, Aluminum and armored cable)	18V/4.0Ah Li-ion	14,5	585x500x170

Hand-operated hydraulic cable cutter GRING

Characteristics:
Flip-top head, rotatable. Aluminum pump lever and housing result in low weight. Built-in pressure relief valve prevents overloading. Press manual release for fast retraction of the ram. Innovative 2-stage hydraulic system reduces operator fatigue and cycle time. Steel storage box.

1. High quality cutting blades. Flip-top head, ratating 350°.
2. Handle lock knob.
3. Aluminum pump lever
4. Manual release.
5. Aluminum pump housing.

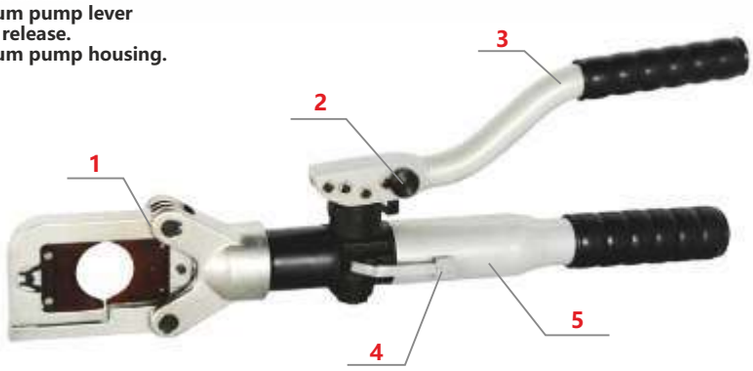

Code	Model	Hydraulic ram output Ton	Cutting range mm	G.W kg	Packing size mm
22501352	GRD-40B	6,5	ø 50 (Copper, Aluminum and armored cable)	8	610x210x110

Hand-operated hydraulic cable cutter GRING

Characteristics:
Aluminum pump lever and housing result in low weight.
Built-in pressure relief valve prevents overloading. Press manual release for fast retraction of the ram. Innovative 2-stage hydraulic system reduces operator fatigue and cycle time.
Steel storage box.

GRD-40C

Flip-top head, rotatable.

GRD-50A

Closed cutting head with bolt interlock, rotatable, flip top style.

Code	*Model*	*Hydraulic ram output Ton*	*Cutting range mm*	*G.W kg*	*Packing size mm*
22501353	GRD-40C	6,5	Ø 40 (Copper, aluminum, armored and armored cable, aluminum conductors)	9,3	610x120x110
22501354	GRD-50A	10	Ø 50 (Copper, Aluminum and armored cable)	9,5	610x121x110

Hand-operated hydraulic cutter GRING

Cuts armoured Al and Cu cables and ACSR conductors
Insulated fiberglass handles

1. **Flip-top head, rotatable.**
2. **Twist handle pressure release.**
3. **Fiberglass handle.**
4. **Insulated rubber sheath.**

GRD-85

GRD-40A

Code	*Model*	*Hydraulic ram output Ton*	*Cutting range mm*	*G.W kg*	*Packing size mm*
22501355	GRD-40A	9	Ø 40 (Copper, Aluminum and armored cable)	7,9	630x110x160
22501356	GRD-85	8,5	Ø 85 (Copper, Aluminum and armored cable)	15,5	860×200×100

Ratchet cable cutters GRING

Heavy-duty forged steel blades provide long life. Easy and quick release of the blades. Blades release allows blades to be opened in mid-cut. High performance ratchet mechanism. Two-handed operation provides more leverage and makes cutting large cables easier. Support bracket helps to increase efficiency and reduce operator fatigue. Not suitable for cutting steel or steel wire. Packed in wear-resistant fabric bag.

For cutting armoured Cu & Al cables

Armored cable	**Cu-Al cable**	**Prestressed steel wire**	**ACSR**	**Steel wire ropes**
✔	✔	✘	✘	✘

GRD-95J

GRD-130J

GRD-100J

GRD-75J

GRD-52J

Code	*Model*	*Cutting range mm*	*Weight kg*	*Packing size mm*
22501367	GRD-130J	Ø 130	9,3	560x370x55
22501368	GRD-100J	3×300 mm² or Ø 100 mm	6,5	530x310x50
22501369	GRD-95J	3×185 mm² or Ø 95 mm	5,2	480x290x40
22501370	GRD-75J	3×120 mm² or Ø 75 mm	3,7	460x240x40
22501371	GRD-52J	Ø 500	3,2	380x150x50

Hydraulic cable cutter heads GRING

GRD-120F

Lock pin type cutter head, blades can be replaced easily.
Carry handle for easy shift in job sites.
More safety with remote operation.
Operated by hydraulic pump with rated pressure 700 bar.

GRD-85F

Cuts armoured Al and Cu cables

Code	*Model*	*Cutting range mm*	*Output force (ton)*	*G.W kg*	*Packing size mm*
22501357	GRD-85F	85	8,5	12,1	535x260x110
22501358	GRD-100F	100		14,5	610x210x110
22501359	GRD-120F	120	13,5	14	630x270x100
22501360	GRD-132F	132		15,8	680x280x100

Hand cable cutters GRING

GRD-125L

GRD-250L

GRD-500L

Aluminum handle.
Two-handed operation provides more leverage.
Made of high quality materials.
Rust-proof and surface-finished.

Code	*Model*	*Cutting range mm²*	*G.W kg*	*Packing size mm*
22501361	GRD-125L	120	0,75	325x115x25
22501362	GRD-250L	240	1,8	600x165x30
22501363	GRD-500L	400	3	820x175x30

GRD-125

GRD-250

GRD-500

Large cutting range.
Not suitable for cutting steel or steel wire.

Code	*Model*	*Cutting range mm²*	*G.W kg*	*Packing size mm*
22501364	GRD-125	120	0,65	370x110x25
22501365	GRD-250	240	2	620x210x30
22501366	GRD-500	400	3,5	750x210x30

Skid-resistant hydraulic puller GRING

Slim tapered jaws for better gripping in tight spots.
Effortless pulling of large components as one man can do the job.
High quality, forged steel jaws and crosshead provide superior reliability and service.
Because of the safety jaw retention system, the pullers will grip on surfaces where normal pullers would slip off, e.g. tapered bearings.

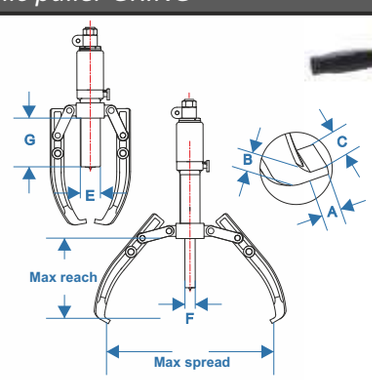

Code	*Model*	*Output Ton*	*Spread mm*	*Max reach mm*	*Ram stroke mm*	*Dimensions mm*						*Weight kg*	*Packing size mm*
						A	*B*	*C*	*E*	*F*	*G*		
22501386	GRL-5S	5	50-250	140	50	10	10	20	45	12	140	13,8	600x120x170
22501387	GRL-10S	10	50-300	170	60				56		137	15,1	570x180x160
22501388	GRL-20S	20	100-400	205	70	12	12	22.5	78		150	20,4	620x250x220

Hydraulic puller GRING

These tools are designed for removing a wide variety of gears, bearings, bushings, pulleys and other press-fitted parts.

Characteristics:
Use with 2 or 3 jaws. High quality, forged steel jaws and crosshead provide superior reliability and service. Precise hydraulic control allows fast, efficient and safe pulling. High force hydraulic system for effortless pulling of large components. More efficent pulling, as one man can do the job where manual pullers ofter require two operators. Spring loaded live centering cone. Handy release knob. Bladder type oil reservior. Rapid adjustment.

Hydraulic Puller and Hand Pump sets

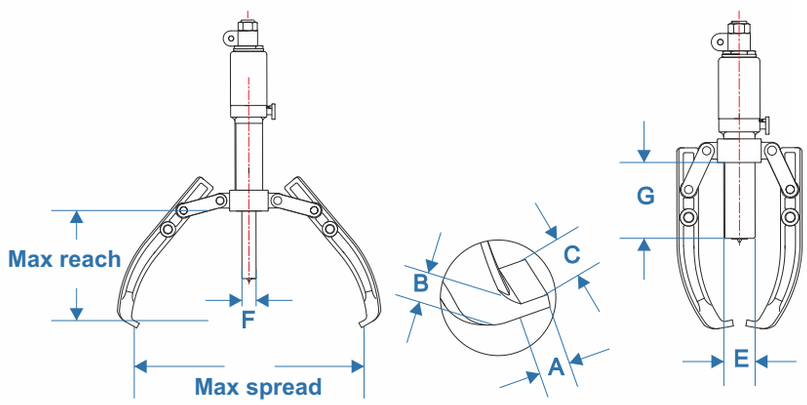

Self-Contained Hydraulic Pullers

Self-Contained Hydraulic Pullers

Code	Model	Output Ton	Spread mm	Max reach mm	Ram stroke mm	Dimensions mm						Weight kg	Packing size mm
						A	B	C	E	F	G		
22501376	GRL-5	5	50-200	140	50	12,5	22,5	26	45	12	140	7,6	420x290x90
22501377	GRL-10	10	50-250	170	60	14	30	30	56		137	10,1	430x330x110
22501378	GRL-20	20	100-350	205	70	21	33	33,5	78		150	1836	440x350x130
22501379	GRL-30	30	150-400	220	70	26	35	36	90		158	24,2	480x200x180
22501380	GRL-50	50	200-500	250	60	25	40	46	114		177	42,9	520x250x220

Hydraulic Puller and Hand Pump sets

Code	Model	Output Ton	Spread mm	Max reach mm	Ram stroke mm	Dimensions mm						Weight kg	Packing size mm
						A	B	C	E	F	G		
22501381	GRL-5F	5	200	140	50	12,5	22,5	26	45	12	140	7,6	480x260x130
22501382	GRL-10F	10	250	170	60	14	30	30	56		137	10,1	480x260x130
22501383	GRL-20F	20	350	205	70	21	33	33,5	78		150	1836	480x200x180
22501384	GRL-30F	30	400	220	70	26	35	36	90		158	24,2	520x250x220
22501385	GRL-50F	50	500	250	60	25	40	46	114		177	42,9	520x250x220

Hand operated hydraulic pump GRING

Features:
Lightweight, robust, durable and compact. Two-speed hydraulic system for fast and easy operation. Reduced handle effort and ergonomic grip for less operator fatigue. Handle lock and lightweight construction for easy carrying. Large and comfortable release knob for improved control of pressure release. Internal pressure relief valve for overload protection. Large oil capacities to power a wide range of cylinders or tools.

GRB-2000

GRB-1000

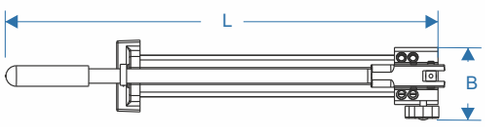

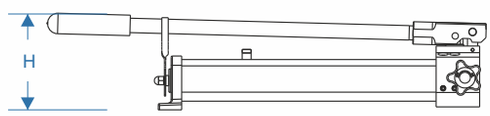

Code	Model	Working pressure bar		Oil displacement per stroke sm³		Reservior sm³		Dimensions mm			Weight kg	Packing size mm
		Low pressure stage	High pressure stage	Low pressure stage	High pressure stage	Oil capacity	Usable oil capacity	L	B	H		
22501389	GRB-1000	20	700	13	2,3	1300	1000	550	110	125	6,4	730x190x190
22501390	GRB-2000					2500	2000		130	140	8,9	

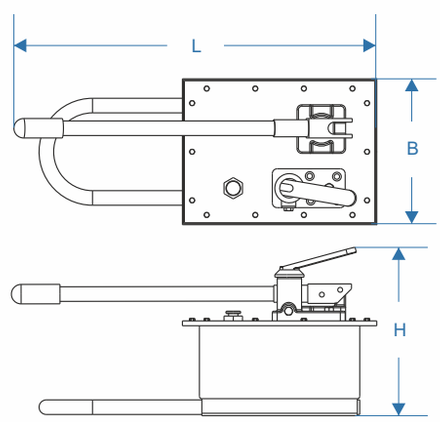

Code	Model	Pump type	Working pressure bar		Oil displacement per stroke sm³		Reservior sm³		Dimensions mm			Weight kg	Packing size mm
			Low pressure stage	High pressure stage	Low pressure stage	High pressure stage	Oil capacity	Usable oil capacity	L	B	H		
22501391	GRB-7000	one-way	20	700	126,2	4,75	7500	7000	740	310	330	26,5	830x380x350
22501392	GRB-7000S	two-way										27,5	

Hand operated hydraulic pump GRING

Features:
Robust, durable and compact.
Two-speed hydraulic system for fast and easy operation.
Lower handle effort to minimize operator fatigue.
Large and comfortable release knob for improved control of pressure release.
Internal pressure relief valve for overload protection.

GRB-700

GRB-700A

GRB-700B

GRB-700C

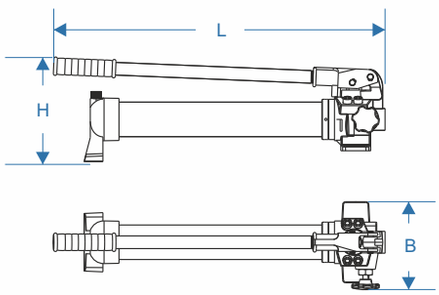

Working pressure 700 bar.
All these pumps are one-way for single-acting applications. GRB-700C is supplied with 1.2-meter length high pressure hose. Other pumps are supplied with 1.8-meter length high pressure hose. GRB-700B is comes with pressure gauge and gauge adaptor.

Code	Model	Working pressure bar		Oil displacement per stroke sm³		Reservior sm³		Dimensions mm			Weight kg	Packing size mm
		Low pressure stage	High pressure stage	Low pressure stage	High pressure stage	Oil capacity	Usable oil capacity	L	B	H		
22501393	GRB-700	20	700	13	2,3	1000	700	600	120	200	10,6	730x190x190
22501394	GRB-700A					3200	2700	715		200	16,8	820x180x180
22501395	GRB-700B					1000	700	600		240	12,4	750x180x270
22501396	GRB-700C			8	1,8	600	350	380		140	5,6	600x160x170

Working pressure 600 bar.
Single-speed hydraulic system.
One-way for single acting hydraulic applications.

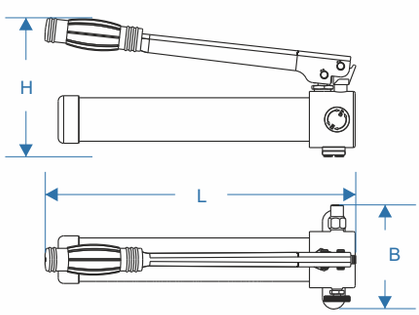

GRB-600A

GRB-600

Code	Model	Working pressure bar		Oil displacement per stroke sm³		Reservior sm³		Dimensions mm			Weight kg	Packing size mm
		Low pressure stage	High pressure stage	Low pressure stage	High pressure stage	Oil capacity	Usable oil capacity	L	B	H		
22501397	GRB-600	/	600	/	2	400	280	320	100	115	5,8	480x260x130
22501398	GRB-600A							370	80	130	6	

Foot Operated Hydraulic Pump GRING

Features:
Robust, durable and compact. For handsfree operation. Foot pedal lock and lightweight construction for easy carrying. Two-speed operation reduces foot pedal strokes. Large hand knob release valve for controlling load descent. Internal pressure relief valve for overload protection.

Working pressure 700 bar.
These pumps are one-way for single-acting hydraulic applications.

GRB-800B

GRB-800

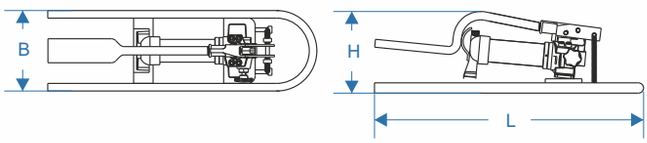

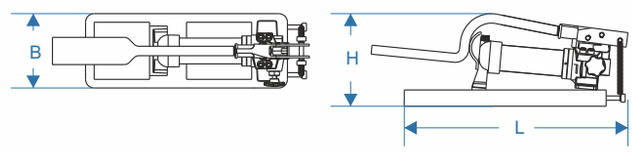

Code	Model	Working pressure bar		Oil displacement per stroke sm³		Reservior sm³		Dimensions mm			Weight kg	Packing size mm
		Low pressure stage	High pressure stage	Low pressure stage	High pressure stage	Oil capacity	Usable oil capacity	L	B	H		
22501399	GRB-800	20	700	13	2,3	600	350	445	145	250	12,8	620x210x260
22501400	GRB-800B							550	150	300	13,9	620x200x260

Hand Operated Hydraulic Pump GRING

Lightweight and carrying handle allows for easy transport of thepump.
Two-speed operation reduces cycle time for improved productivity. All valves are 3 position for Advance-Hold-Retract.
All the pumps are equipped with pressure gauge, which minimizes the risk of overloading and ensure long, dependable service.
Manual valve and motor control. Internal pressure relief valve prevents overloading.
Each pump comes with 1.5 meterb hose and 3/8" NPT male coupler.

GRB-630C

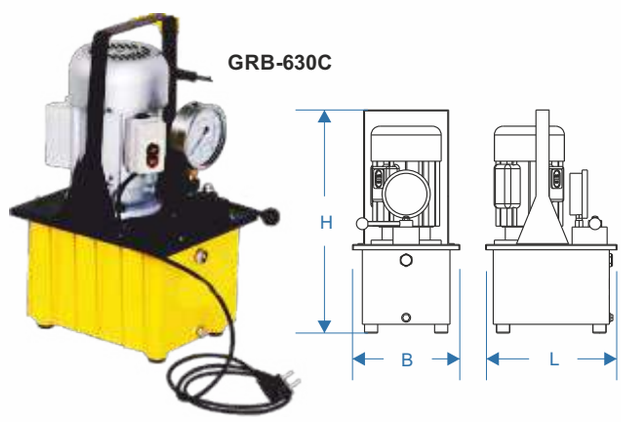

Code	Model	Pump type	Working pressure bar		Oil displacement per stroke sm³		Power rating (kw)	Usable oil capacity l	Dimensions mm			Weight kg	Packing size mm
			Low pressure stage	High pressure stage	Low pressure stage	High pressure stage			L	B	H		
22501401	GRB-630A	one-way	20	700	5	0,7	0,75	8	305	245	510	18,6	790x240x270
22501402	GRB-630C	two-way											
22501403	GRB-630B	one-way											

Hand Operated Hydraulic Pump GRING

Features:
Lightweight and carrying handle allows for easy transport of the pump. Two-speed operation reduces cycle time for improved productivity. The valves are 3 position for Advance-Hold-Retract. The pumps are equipped with pressure gauge, which minimizes the risk of overloading and ensure long, dependable service. Internal pressure relief valve prevents overloading. Each pump comes with 1.5 meter hose and 3/8" NPT male coupler.

Working pressure: 700 bar.
Oil reservior: 8 liters.
Foot switch enables hands-free remote control.
Solenoid valve makes the pumps ideal for production and lifting.

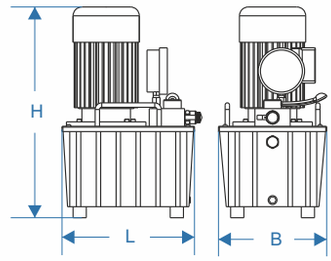

GRB-630F

GRB-630E

GRB-630B-III

GRB-630B-I

Code	*Model*	*Pump type*	*Working pressure bar*		*Oil displacement per stroke sm³*		*Power rating (kw)*	*Usable oil capacity l*	*Dimensions mm*			*Weight kg*	*Packing size mm*
			Low pressure stage	*High pressure stage*	*Low pressure stage*	*High pressure stage*			*L*	*B*	*H*		
22501404	GRB-630E	one-way	20	700	5	0,7	0,75	8	325	255	565	25,9	370x310x540
22501405	GRB-630F								305	245	515	25,2	
22501406	GRB-630B-I	two-way							325	255	450	29,2	
22501407	GRB-630B -III				10	1,5	1,5	35	455	355	630	55,4	500x380x700
						2,5	2,2					62,4	
						3	3						

Features:
Two-speed operation reduces cycle time for improved productivity.
All valves are 3 position for Advance-Hold-Retract.
All the pumps are equipped with pressure gauge, which minimizes the risk of overloading and ensure long, dependable service.
Manual valve and motor control.
Internal pressure relief valve prevents overloading.
Long, trouble free life in the most demanding work environments.
The pumps have a very large 35 liters oil reservior, which means adequate capacity for multi-cylinder applications.

GRB-630B-II

Code	*Model*	*Pump type*	*Working pressure bar*		*Oil displacement per stroke sm³*		*Power rating (kw)*	*Usable oil capacity l*	*Dimensions mm*			*Weight kg*	*Packing size mm*
			Low pressure stage	*High pressure stage*	*Low pressure stage*	*High pressure stage*			*L*	*B*	*H*		
22501408	GRB-630M	one-way	20	700	5	0,7	1,5	8	325	255	450	18,6	370x310x540
					10	1,5	2,2	35	455	355	630		500x380x700
						2,5	3				660		
22501409	GRB-630B -II	two-way				3	1,5						
						2	2,2						
						3	3						

Gasoline Powered Hydraulic Pumps GRING

GRB-160B

GRB-150B

Features:
6.5HP/5.5HP Briggs & Stratton engine.
Manual control valve. High-pressure safety relief valve.
Protective roll cage for use in tough enviroment.
For use with either single or double acting tools.

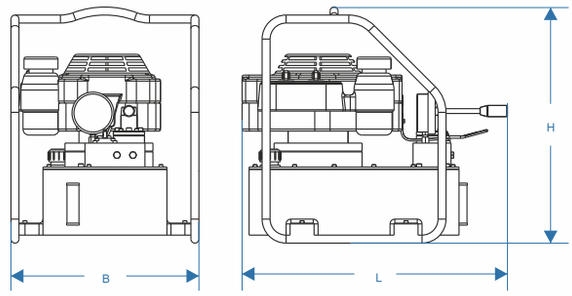

Code	Model	Working pressure bar		Oil displacement per stroke sm³		Power rating (kw)	Usable oil capacity l	Dimensions mm			Weight kg	Packing size mm
		Low pressure stage	High pressure stage	Low pressure stage	High pressure stage			L	B	H		
22501410	GRB-160B	20	700	6	1,2	6,5	25	620	360	500	48,5	630x440x620
22501411	GRB-850B				0,9	5,5	15	580		480	48,2	

Foot Operated Hydraulic Pump GRING

Features:
Robust, durable and compaction. Handle lock for easy transport.
Two-speed o hydraulic system for fast and easy operation.
Reduced handle effort and ergonomic grip. Large oil capacities to power a wide range of cylinders or tools. Internal pressure relief valve for overload protection.

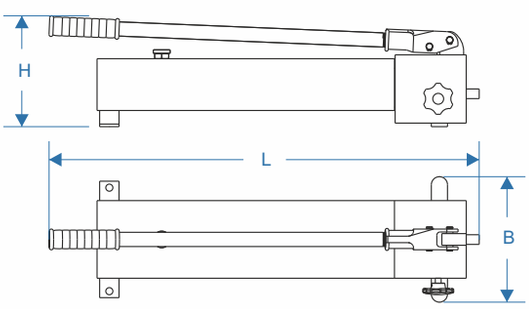

Working pressure 700 bar.
Square and large oil tank. GRB-700S is two-way pump for double-acting hydraulic applications

Code	Model	Pump type	Working pressure bar		Oil displacement per stroke sm³		Reservior sm³		Dimensions mm			Weight kg	Packing size mm
			Low pressure stage	High pressure stage	Low pressure stage	High pressure stage	Oil capacity	Usable oil capacity	L	B	H		
22501413	GRB-700S	двусторон./ two-way	20	700	13	2,3	2500	2000	710	150	210	18,6	790x240x270

Battery powered universal tool 3 in 1 GRING

Characteristics:
One universal head to complete crimping, cutting and punching jobs. Two-stage hydraulic system features fast feed and power stroke upon reaching counter pressure, saving time. 10000 + cycle service life. Ram retracts to original position automatically when operation is complete. Manual retraction in case of need. Audible buzzer and red LED light in case of error. Quick motor stop for higher user safety. Powerful 18V Li-ion battery with low battery warning. Ergonomic 2-component grip area and balanced center of gravity. Sturdy plastic storage box.

1. Flip-top head, rotating 330°.
2. Audible buzzer and red LED in case of error.
3. One button operation.
4. Manual retraction in case of need.
5. Ergonomic 2-component grip area.
6. High performance 18V Li-Ion battery.

Crimp copper lug 16-300mm² or aluminum lug 10-240mm²

Cut Cu/Al wire or armoured cable up to Ø 40mm

Punch holes Ø 22-60mm

One head for crimping, cutting and punching - one tool for all Lightweight and well-balanced. Interchangeable crimping dies, cutting blades and punching adapter. Only seconds of time is needed to switch crimping, cutting and punching functions.

Set	*Size*	*Pcs*
Crimping dies	16, 25, 35, 50, 70, 95, 120, 150, 185, 240, 300 mm²	11
Punching dies	22, 27, 34, 43, 49, 60 mm	6
Battery		2
Charger		1
Blade		1
Adapter for crimping & punching		1
Draw stud	M 20x1,5 / M 10x1	1
Spacer		1
Seals for the cylinder & safety valve		1

Code	*Model*	*Hydraulic Ram output Ton*	*Ram stroke mm*	*Battery capacity*	*Cutting range mm*	*Crimping range mm²*	*Punching range mm*	*Battery*	*Charging time*
22501348	GRYD-60H	6	42	cycles: 90 cutting, 190 crimping, 100 punching	Ø 40 (Cu/Al and armoured cable)	16-300	Ø 22-60	18V/ 4.0Ah Li-ion	2 hours

Hand operated hydraulic universal tool 3 in 1 GRING

Characteristics
Universal head, flip-top style, rotatable. Light weight due to high quality aluminum housing. Thanks to the automatic retraction function, poor crimps are avoided, more safety and shorter intervals between crimping operations. Manual release in case of need. The rotatable head permits to work in tight locations. Faster operation with less force thanks to the 2-stage hydraulic system. Closed work head, flip top style, rotatable. Sturdy steel storage box.

1. Flip top universal head, rotating 330°.
2. Handle lock knob.
3. Aluminum pump lever.
4. Manual release.
5. Aluminum pump housing.

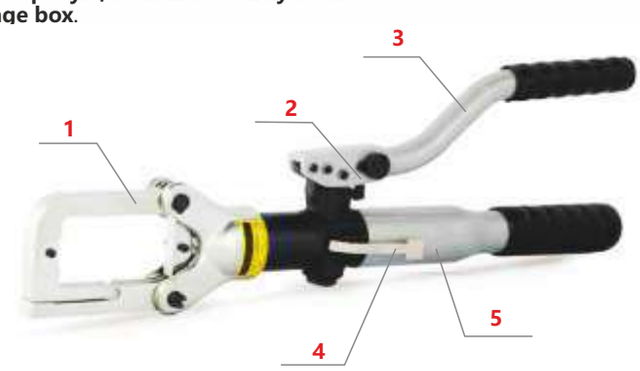

Crimp copper lug 16-300mm² or aluminum lug 10-240mm²

Cut Cu/Al wire or armoured cable up to Ø 40mm

Punch holes Ø 22-60mm

Set	*Size*	*Pcs*
Crimping dies	16, 25, 35, 50, 70, 95, 120, 150, 185, 240, 300 mm²	11
Punching dies	22, 27, 34, 43, 49, 60 mm	6
Blade		1
Adapter for crimping & punching		1
Draw stud	M 20x1,5 / M 10x1	1
Spacer		1
Seals for the cylinder & safety valve		1

Code	*Model*	*Ram output Ton*	*Ram stroke mm*	*Cutting range mm*	*Crimping range mm²*	*Punching range mm*	*G.W kg*	*Packing size mm*
22501349	GRY-60H	6,5	42	Ø 40 (Cu/Al and armoured cable)	16-300	Ø 22,5-61,5	14,5	610x210x110

Couplers GRING

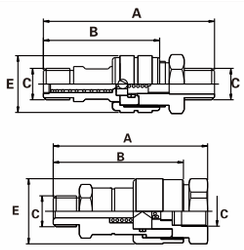

	Code	Model	Pressure rating	Dimension				
				A mm	B mm	C mm	D mm	E mm
	22501414	GR-1	700 bar	83	70	3/8"NPT	-	35
	22501415	GR-2	700 bar	90	61	3/8"NPT	1/4"NPT	30
	22501416	GR-3	700 bar	87	53	3/8"NPT	-	27
	22501417	GR-4	700 bar	90	61	M16X1.5	-	30

Gauges GRING

	Code	Model	Gauge face mm	Thread	Calibration
	22501418	SPG100	Ø 100	M20×1.5	100Mpa
	22501419	SPG60	Ø 60	1/4"NPT	80Mpa

Needle Valve GRING

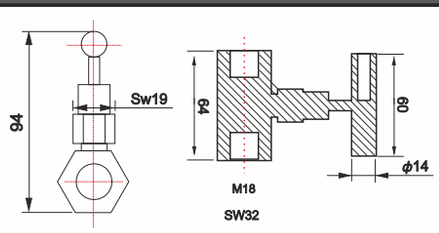

Code	Model
22501420	SOV700

Hoses GRING

	Code	Model	Fitting	Pressure rating
	22501421	RH_M	3/8"NPT	700 bar
	22501422	TPH_M	3/8"NPT	700 bar

Manifolds GRING

	Code	Model	Part Name	Pressure rating	Outlet port
	22501423	MF2RCT	2-port manifold	700bar	3/8″ NPT
	22501424	MF3RCT	3-port manifold	700bar	3/8″ NPT
	22501425	MF4RCT	4-port manifold	700bar	3/8″ NPT
	22501426	MF6HEX	6-port hexagon manifold	700bar	3/8″ NPT

3-Way Directional Control Valve GRING

		Code	Model
	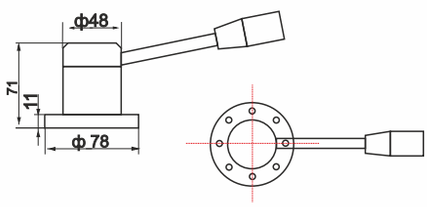	**22501427**	RV700

Safety Holding Valve GRING

		Code	Model
	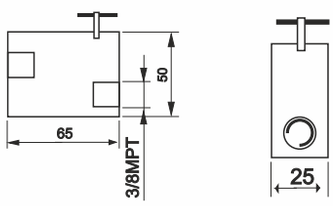	**22501428**	HDL700

Gauge Adaptors GRING

		Code	Model
	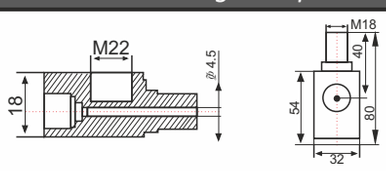	**22501429**	Ga7001
	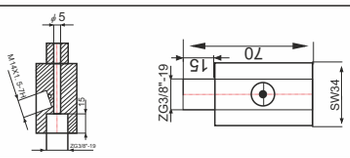	**22501430**	GA7002

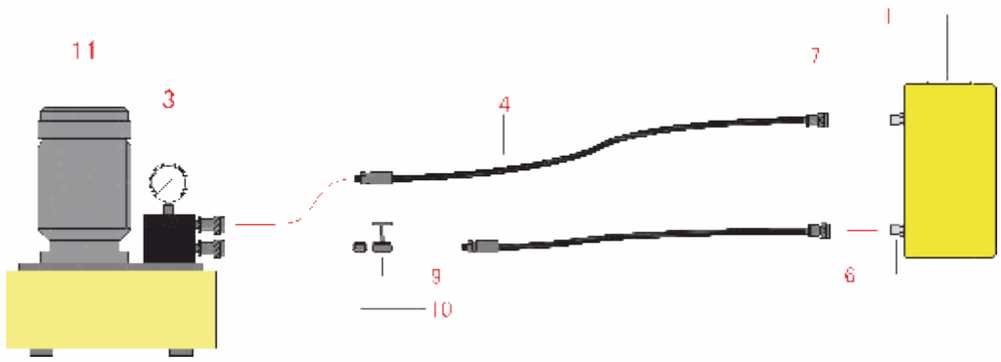

Set-up four: Two-way electric pump + Two hoses + Double acting hydraulic cylinder.
Double-acting cylinder set-up used for lifting
application where a slow controlled descent of the load must be maintained.
Throttle valve and one-way valve could be installed
for regulating the flow of hydraulic fluid and controlling load descent.

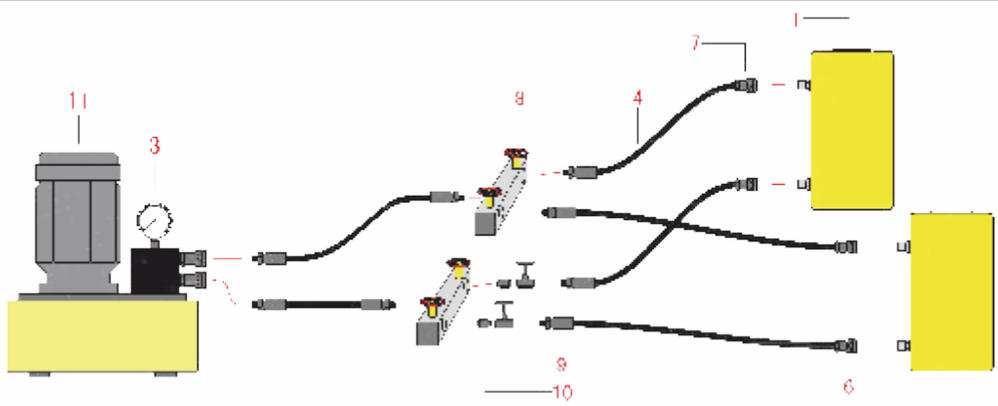

Set-up five: Two-way electric pump + Two manifolds + Six hoses + Two double acting hydraulic cylinders.
With 2- or more-port
manifold, the system allows simultaneous lift and descent of several double acting cylinders.
Throttle valve installed on the outlet
port of manifold regulates the flow of hydraulic fluid to or from the cylinders,
so as to control the lift and descent of each cylinder
and maintain horizontal movement of load.

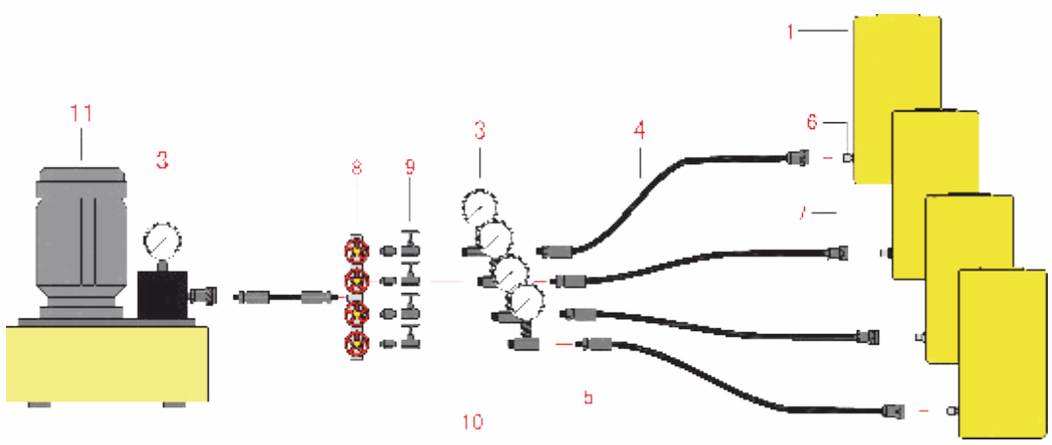

Set-up Six: One-way electric pump + Manifold + Five hoses + Four single acting cylinder.
With 4- or more- port manifold, the
system allow simultaneous lift of several single acting cylinders.
Throttle valve regulates the flow of hydraulic fluid to or from the
cylinders. One- way valve allows safety holding of load in lifting applications.

Hydraulic cylinder set-ups Gring

1. Cylinder
2. Head pump
3. Pressure gauge
4. Hose
5. Gauge adaptor
6. Male coupler
7. Female coupler
8. Manifold
9. Throttle valve
10. Connector
11. Eclectic pump
12. Safety holding valve

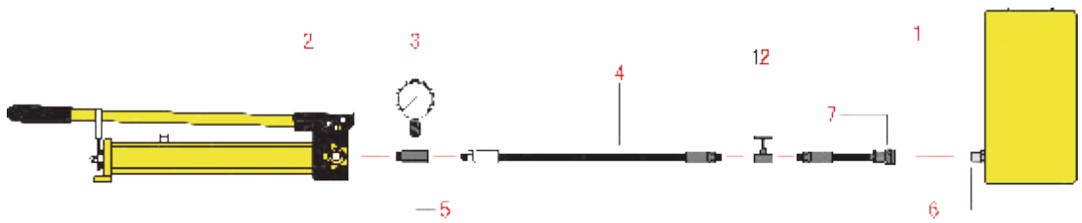

Set-up one: One-way hand pump+Hose+Single acting hydraulic cylinder It is the basic system set-up. The oil reservior of pump must be larger than the oil capacity of cylinder, so as to offer full cylinder stroke.

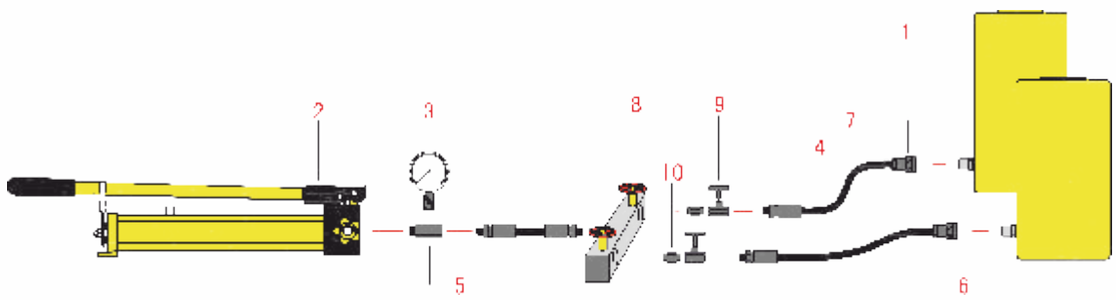

Set-up Two: One-way hand pump+Manifold +Three hoses+Two single acting hydraulic cylinders. With 2-or more-port manifold. The system allows simultaneous lift of several single acting cylinders. Throttle valve installed on the outlet port of manifold regulates the flow of hydraulic fluid to or from the cylinders, so as to control the lifting height of each cylinder and maintain horizontal movement of load.

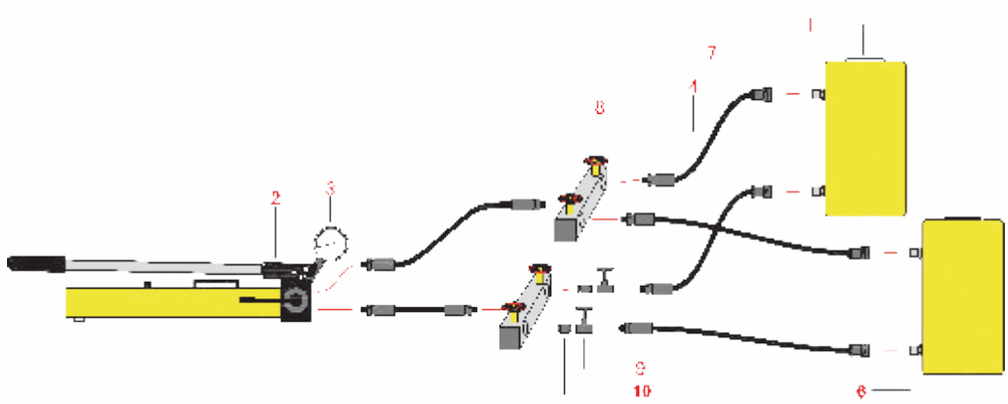

Set-up three: Two-way hand pump + Two manifolds + Six hoses + Two double acting hydraulic cylinders With 2-or more-port manifold, the system allows simultaneous lift and descent of several double acting cylinders. Throttle valve installed on the outlet port of manifold regulates the flow of hydraulic fluid to or from the cylinders, so as to control the lift and descent of each cylinder and maintain horizontal movement of load.

For notes

GRING

gring-tool.de
info@gring-tool.de